BRITISH COLUMBIA
The Best Place on Earth

Ministry of Forests and Range Revenue Branch

MEMORANDUM

File: 195-30/SCAL
Cliff: 122378

November 18, 2009

BY EMAIL

To: Regional Executive Directors

From: Murray Stech
Director
Revenue Branch

Re: Revision to the *Scaling Manual*

I hereby approve this revision to the *Scaling Manual* and attach a link to the scaling manual for your use: http://www.for.gov.bc/hva/manuals/scaling.htm.

This revision provides an update to the manual and appendices as follows:

- Updated procedures and added information on new business practices.
- Simplified reading for users by streamlining and by removing redundancies and duplications.
- Corrected spelling and diagram errors.
- Updates to match new legislation and regulations.

Murray Stech
Director
Revenue Branch

pc: Coast Scaling Advisory Committee
Interior Scaling Advisory Committee

REVENUE BRANCH

Scaling Manual

November 18, 2009

BRITISH COLUMBIA

This manual is intended for the use of individuals or companies when conducting business with the British Columbia Government. Permission is granted to reproduce it for such purposes. This manual and related documentation and publications, are protected under the *Federal Copyright Act*. They may not be reproduced for sale or for other purposes without the express written permission of the Province of British Columbia.

Introduction

Under British Columbia's *Forest Act*, all timber harvested from both Crown and private land must be scaled. Timber is scaled to determine its volume and quality.

This manual documents how timber is scaled for purposes of the *Forest Act* and the *Scaling Regulation*.

Scale data is the basis for many transactions for both government and industry. To ensure scale results are reliable and mean the same thing to all users, scaling is dependent upon compliance with the standards, conventions, and procedures prescribed in this manual.

If You Need More Information

This manual was written as a reference and a working tool for government, industry, students and anyone else with an interest in scaling. With such a broad target audience, it may not provide sufficient detail to meet all your needs.

If you need clarification on any topic, we encourage you to contact your local Forest Service office.

We Need Your Comments and Suggestions

To ensure this manual is useful for you, it is important that you provide us with your comments and suggestions.

Please send them to:

Scaling Policy Forester
Ministry of Forests and Range
Revenue Branch
PO Box 9511, Stn Prov Govt
Victoria, BC V8W 3E7

Or, use the Scaling Manual's feedback form that can be found at the following Internet address:

Manuals Feedback

To Obtain a Scaling Manual

The Scaling Manual is available electronically on the Internet at:

http://www.for.gov.bc.ca/hva/manuals/scaling.htm

For those who may still wish to purchase a hard copy of the Scaling Manual, it is available for a fee through:

Crown Publication
106 Ontario Street
Victoria, BC V8V 1M9

1-877-747-4636
(Toll Free)

You can also get Scaling Manual information from the Crown Publications, General Publications page:

Crown Publications

Manual Amendments

The forum to discuss changes will continue to be Interior Scaling Advisory Committee and the Coast Scaling Advisory Committee via meetings and conference calls. The preferred protocol with a three month lapse is:

- issue draft amendments,
- organize conference calls with committee or sub-committee to elaborate on assessment,
- ask for written submissions, and
- host committee meeting and finalize.

Future amendments to this manual can be printed from the Internet or purchased from Crown Publications.

Check out the Ministry of Forests "What's New" page for upcoming amendments and new publication information at:

What's New?

This information can also be found in the Scaling Manuals Table of Contents at:

Scaling Manual

Some of the Elements of Scaling

Hammer indenting a log with a timber mark.

An interior scaler entering data into a handheld computer.

A loaded truck on a weight scale.

A defective log on a scale site.

A coastal dryland sort.

Table of Contents

Introduction

1 Scaling Overview

1.1 The Role of Scaling and its Importance 1-2
1.1.1 Cruise Based Tenures 1-2
1.2 The Evolution of BCs Scaling Practices 1-3
1.2.1 British Columbia's Official Scales 1-3
1.2.2 History of Log Grading in BC 1-7
1.2.3 The Roles and Responsibility for Scaling 1-8
1.2.4 Scaling Methods 1-9
1.2.4.1 Piece Scaling 1-9
1.2.4.2 Weight Scaling 1-9
1.2.4.3 Special Forest Products 1-10
1.3 The Legal and Administrative Framework for Scaling 1-11
1.3.1 General 1-11
1.3.2 The *Forest Act* – Part 6 – Timber Scaling 1-11
1.3.3 The *Forest Act* – Part 6 – Timber Marking 1-11
1.4 Who Can Scale? 1-13
1.5 Scaling Requirements in British Columbia 1-14

2 Timber Marking and Branding

2.1 Registered Timber Marks 2-3
2.1.1 Purpose of Timber Marks 2-4
2.1.2 Timber Marking Requirements 2-5
2.1.3 Requirements of the Scaler 2-5
2.1.4 Timber Mark Formats 2-6
2.1.4.1 Recording Characters 2-6
2.1.5 Types of Marks 2-7
2.1.5.1 Major Types of Timber Marks 2-7
2.1.5.2 Marks for Privately Owned Land 2-11
2.2 Log Brands 2-12
2.2.1 Scaled Timber Brands 2-12
2.2.1.1 Authority 2-12
2.2.1.2 Purpose 2-12
2.2.1.3 Marking Requirements 2-13
2.2.2 Requirements of Scalers and Timber Weighers 2-13
2.2.2.1 Format of Scaled Timber Brands 2-13
2.2.2.2 Applying for a Scaled Timber Brand (FS 1308) 2-13
2.3 Marine Log Brands 2-14
2.3.1 Authority 2-14

2.3.2 Purpose 2-14
2.3.3 Marking Requirements 2-14
2.3.4 Requirements of Scalers 2-14
2.3.5 Format of Marine Log Brands 2-15
2.3.6 Applying for a Marine Log Brand 2-15
2.4 Log Salvage Identification Marks 2-16
2.4.1 Authority 2-16
2.4.2 Purpose 2-16
2.4.3 Marking Requirements 2-16
2.4.4 Format of Log Salvage Identification Marks 2-16

3 Species Identification and Defects

3.1 Purpose of Classification by Species 3-2
3.2 Common Tree Defects 3-6
3.2.1 Disease 3-6
3.2.2 Other Natural Defects 3-6
3.2.3 Mechanical Defects 3-7

4 Smalian's Formula

4.1 Smalian's Formula 4-2
4.1.1 Smalian's Formula in Detail 4-2
4.2 Log Forms and the Formula 4-4
4.2.1 Smalian's Formula - Example Calculation 4-8
4.2.2 Smalian's Formula - Simplified 4-9
4.2.3 Smalian's Simple Formula - Example Calculation 4-10
4.2.4 The Application of Smalian's Formula 4-10
4.3 Other Formulae 4-11

5 Scaling Tools

5.1 Scaling Tools 5-2
5.1.1 BC Metric Scaling Stick 5-2
5.1.2 Tally sheets 5-2
5.1.3 Hand-held Computers 5-2
5.1.4 Volume Tables 5-2
5.1.5 Measuring Tapes 5-2
5.1.6 Limits of Error 5-2
5.2 The BC Metric Scale Stick 5-3
5.2.1 Application of the Scale Stick to Measure Diameters 5-3
5.2.2 Application of the Scale Stick to Measure Widths and Thicknesses 5-3
5.2.3 The Application of the Scale Stick to Measure Lengths 5-3
5.2.4 The Application of the Scale Stick for Unit Volumes 5-4

5.2.5 The Application of the Scale Stick for Half Volumes 5-4
5.3 Log Scale Stick Specifications as Approved for Official Scaling in British Columbia 5-14
5.3.1 Parts of a Scale Stick 5-16

6 Gross Measurement Procedures

6.1 Measurements 6-3
6.1.1 Units of Measure 6-3
6.1.2 The British Columbia Metric Scale 6-3
6.1.3 Errors in Measurement 6-3
6.2 Measuring Log Dimensions 6-5
6.2.1 Measuring Log Diameters 6-5
6.2.1.1 Measuring Round and Out of Round Log Ends 6-6
6.2.1.2 Measuring Shattered and Split-Back End Diameters 6-7
6.2.1.3 Measuring Irregular End Diameters 6-8
6.2.1.4 Measuring Forked End Diameters 6-9
6.2.2 Measuring Flared Butt Diameters 6-9
6.2.2.1 Callipering 6-10
6.2.2.2 Projecting the Normal Line of Taper 6-11
6.2.3 Measuring Lengths 6-13
6.2.3.1 Length Rounding Conventions and Measuring Tools 6-14
6.2.3.2 Finding the Geometric Centre of a Log for Length Measurement 6-15
6.2.3.3 Measuring Lengths of Butt Logs with Undercut 6-16
6.2.3.4 Measuring Lengths of Logs With Portions Under Ten Centimetres 6-17
6.2.3.5 Measuring Lengths of Logs With Shattered Ends 6-18
6.2.3.6 Measuring Lengths of Logs with Sniped Ends 6-19
6.2.3.7 Measuring Lengths of Logs with Missing Chunks 6-20
6.2.3.8 Measuring Lengths of Logs with Forks 6-20
6.2.3.9 Measuring Lengths of Logs with Sweep 6-22
6.2.3.10 Measuring Lengths of Logs with Crook 6-22
6.3 Measuring Slab Ends 6-23
6.3.1 Measuring Semicircular Slab Ends 6-24
6.3.2 Measuring Slab Ends and Sectors with a Hole 6-26
6.3.2.1 Measuring a Semicircular Slab End with Hole 6-26
6.3.2.2 Measuring a Slab Sector with Hole 6-28
6.3.3 Measuring Sectors (pie wedge slab ends) Smaller than a Semicircle 6-28
6.3.3.1 Measuring Small Sectors by Averaging the Dimensions 6-30
6.3.3.2 Measuring a True Quadrant and Other Sectors by Applying a Factor 6-31
6.3.4 Measuring Slab Sectors and Segments Greater Than a Semicircle 6-32
6.3.5 Measuring Four Sided (plank-like, timber-like) Slab Ends 6-32
6.3.6 Measuring Triangular (three sided) Slab Ends 6-35

7 Firmwood Defects and Conventions

7.1 Firmwood Deductions 7-2
7.2 Firmwood Deduction Principles 7-3
7.3 Geometric Shapes 7-4
7.4 Deduction Methods 7-5
7.4.1 Gross/Net Method 7-6
7.4.2 Net Dimensions Method 7-6
7.4.2.1 Length Deduction 7-6
7.4.2.2 Average Unit Volumes 7-7
7.4.2.3 Diameter Deduction or Radius Reduction Method 7-8
7.5 Conventions for Estimating Rot 7-9
7.5.1 Scaling Conventions versus Local Knowledge 7-9
7.6 Formulas and Their Terms 7-10
7.7 Defect Conventions and Examples 7-11
7.7.1 Conical Defects 7-11
7.7.2 Butt Rot Conventions 7-11
7.7.3 Butt Defect - Butt Rot (Conical) Partial Length of Log 7-12
7.7.3.1 Example and Illustration - Butt Rot Visible at Butt End of Log 7-12
7.7.3.1 The Gross/Net Calculation- Butt Rot 7-13
7.7.3.2 The Net Dimensions Calculation – Butt Rot 7-14
7.7.3.3 Example and Illustration - Butt Rot Visible at Both Ends of Log 7-14
7.7.4 The Catface (Conical) 7-19
7.7.4.1 Example and Illustration - Single Catface 7-19
7.7.4.2 The Gross/Net Calculation – Single Catface 7-19
7.7.4.3 Net Dimensions Calculation - Single Catface 7-20
7.7.5 The Catface (Double Conical) 7-21
7.7.5.1 Example and Illustration - Double Catface 7-22
7.7.5.2 The Gross/Net Calculation – Double Catface 7-22
7.7.5.3 Net Dimensions Calculation - Double Catface 7-23
7.7.6 Standard Heart Rot Conventions 7-24
7.7.6.1 Cylindrical Defects 7-24
7.7.6.2 Heart Defect – Conventions - Partial Length 7-27
7.7.7 Assessing Conk, Indian Paint Fungus and Pin Rot 7-29
7.7.7.1 Basic Conk Assessments 7-30
7.7.7.2 Assessing Conk Rot; Visible Conk Knot(s), No Rot Visible 7-31
7.7.7.3 Assessing Conk Rot; Visible Conk Knot(s), Rot Visible at One End 7-31
7.7.7.4 Assessing Conk Rot; No Visible Conk Knot(s), Rot Visible at One End 7-32
7.7.8 Ring Defect 7-33
7.7.8.1 Ring Rot Conventions 7-33
7.7.8.2 Ring Defect - Through Running 7-33
7.7.8.3 Ring Defect - Partial Length of Log 7-36
7.7.9 Pocket Defects 7-38

7.7.9.1 Pocket Rot Conventions 7-38
7.7.9.2 Pocket Defect - Partial Length 7-43
7.7.10 Triangular defects 7-45
7.7.10.1 Example and Illustration - Triangular Defect 7-45
7.7.10.2 The Gross/Net Calculation – Triangular Defect 7-46
7.7.10.3 Net Calculation - Triangular Defects 7-47
7.7.11 Sap Rot Conventions 7-48
7.7.11.1 Sap Rot Examples and Calculations 7-48
7.7.11.2 Gross/Net Calculation – Sap Rot, Full Length 7-48
7.7.11.3 Net Dimensions Calculation-Sap Rot-Full Length 7-49
7.7.11.4 Net Dimensions Calculations – Diameter Deduction 7-50
7.7.12 Other Defects 7-50
7.7.12.1 Missing Segments 7-51
7.7.13 Missing Sectors 7-53
7.7.13.1 Example and Illustration – Missing Segment/Surface Defect 7-54
7.7.13.2 The Gross/Net Calculation – Sector Defect 7-54
7.7.13.3 Net Dimensions Calculation - Sector Defect 7-55
7.7.14 Assessing Goitre 7-56

8 Timber Grading

8.1 Timber Grading 8-2
8.2 Timber Grading Requirements 8-3
8.3 Principles of Timber Grading 8-4
8.3.1 Characteristics Which Reduce Product Recovery (Quantity) 8-6
8.3.1.1 Fractures and Fibre Separation 8-6
8.3.1.2 Bark Seams 8-9
8.3.1.3 Sweep, Crook and Pistol Grip 8-9
8.3.1.4 Rot, Hole, Char, and Missing Wood 8-9
8.3.2 Characteristics Which Reduce Product Recovery (Quality) 8-10
8.3.2.1 Twist (Spiral Grain) 8-11
8.3.2.2 Knots 8-13
8.3.2.3 Insect or Worm Holes 8-19
8.3.2.4 Non-Permissible Defects 8-19
8.3.2.5 Grain Density (Ring Count) - Coastal Grading Only 8-20
8.3.2.6 Compression Wood (Interior only) 8-20
8.4 Applying the Principles of Grading 8-22
8.4.1 Determining Grade Reduction 8-23
8.4.2 Log Size 8-23
8.4.2.1 Length 8-24
8.5 Assessing Product Recovery 8-25
8.5.1 Lengths of Defects 8-26
8.5.2 Determining Grade Reduction for Collars (Shells) 8-26
8.5.3 Determining Grade Reduction for Sound Hearts (Residual Cores) 8-28
8.5.4 Determining Grade Reduction for Multiple Defects 8-31
8.5.5 Slab Thickness and Grading 8-32

8.5.5.1 For Coastal Grades 8-34
8.5.5.2 For Interior Grades 8-34
8.6 Determining Trim Allowance 8-35
8.6.1 The Application of Trim Allowance for Butt Rots 8-40
8.6.2 Trim Allowance and Ring Shake 8-43
8.6.3 Trim Allowance and Ring Rot 8-46
8.6.4 Trim Allowance and Multiple Ring Rot 8-49
8.6.5 Application of Trim Allowance to Checks and Shake 8-54
8.6.6 Application of Trim Allowance to Off Centre and Overlapping Defect 8-57
8.6.7 Determining Grade Reduction for Spiral Checks 8-59
8.6.8 Determining Lengths for Grading Purposes – Logs and Log Segments 8-61
8.6.9 Assessing Grade in Logs with Crook, Pistol Grip and Sweep 8-67
8.6.9.1 Crook 8-67
8.6.9.2 Pistol Grip 8-67
8.6.9.3 Sweep 8-68

9 Interior Grading

9.1 Interpreting the Schedule of Interior Timber Grades 9-2
9.1.1 Grade Applicability 9-2
9.1.2 Grade Precedence 9-2
9.1.3 Identifying Undersized Logs in the Interior 9-3
9.2 Physical Characteristics Affecting Log Grades 9-4
9.2.1 Compression Wood 9-4
9.2.2 Checks 9-4
9.2.3 Procedures for Assessing Checks under the Grade Code 2 Log Requirements to Make the Grade: 9-4
9.2.4 Delay in Scaling 9-5
9.3 Potential for Manufacture of Product - Quantity 9-6
9.3.1 Log Size 9-6
9.3.2 Insect or Worm Holes 9-6
9.4 Potential for Manufacture of Products - Quality 9-7
9.4.1 Occasional Oversized Knots 9-7
9.4.2 Knot Spacing 9-7
9.4.3 Twist (Spiral Grain) 9-8
9.4.4 Non-Permissible Defects 9-8
9.5 Interior Grade Rules and Application 9-9
9.5.1 Firmwood Reject - Grade Code Z (weight scale, species code or species code R) 9-9
9.5.1.1 Grade Rule 9-9
9.5.1.2 Application of the Grade Rule 9-9
9.5.2 Undersized Log Grade- Grade Code 6 9-9
9.5.2.1 Grade Rule 9-9
9.5.2.2 Log Requirements to Make the Grade 9-9

9.5.3 Premium Sawlog- Grade Code 1 9-10
9.5.3.1 Grade Rule 9-10
9.5.3.2 Log Requirements to Make the Grade 9-10
9.5.4 Sawlog - Grade Code 2 9-12
9.5.4.1 Grade Rule 9-12
9.5.4.2 Log Requirements to Make the Grade 9-12
9.5.5 Lumber Reject Grade Code 4 9-14
9.5.5.1 Grade Rule 9-14
9.5.5.2 Log Requirements to Make the Grade 9-14

10 Coast Grading

10.1 Interpreting the Schedule of Coast Timber Grades 10-2
10.1.1 Grade Applicability 10-2
10.1.2 Grade Precedence 10-2
10.2 Physical Characteristics Affecting Log Grades 10-3
10.2.1 Potential for Manufacture of Products - Quantity 10-3
10.2.2 Log Size 10-3
10.2.2.1 Length 10-3
10.3 Potential for Manufacture of Products - Quality 10-4
10.3.1 Size of Knots 10-4
10.3.2 Occasional Oversized Knots 10-4
10.3.3 Pitch 10-4
10.3.4 Growth Rate (Ring Count) 10-4
10.3.5 Stain 10-5
10.4 Coast Grade Rules and Requirements 10-6
10.4.1 Firmwood Reject - All Species - Grade Code Z (species code or code R) 10-6
10.4.1.1 Grade Rule 10-6
10.4.2 Coniferous Grades 10-6
10.4.3 Balsam and Hemlock Grades 10-6
10.4.3.1 No 1 Lumber Balsam and Hemlock, Grade Code D 10-7
10.4.3.2 No. 2 Lumber Balsam and Hemlock, Grade Code F 10-7
10.4.3.3 No. 2 Sawlog Balsam and Hemlock, Grade Code H 10-8
10.4.3.4 No. 3 Sawlog Balsam and Hemlock, Grade Code I 10-9
10.4.4 Cedar Grades 10-9
10.4.4.1 Lumber Grades 10-9
10.4.4.2 No. 1 Lumber Cedar, Grade Code D 10-10
10.4.4.3 No. 2 Lumber Cedar, Grade Code F 10-10
10.4.4.4 Sawlog Grades 10-11
10.4.4.5 No. 2 Sawlog Cedar, Grade Code H 10-11
10.4.4.6 No. 3 Sawlog Cedar, Grade Code I 10-12
10.4.4.7 No. 4 Sawlog Cedar, Grade Code J 10-12
10.4.4.8 Shingle Grades 10-13
10.4.4.9 No. 1 Shingle Cedar, Grade Code K 10-13
10.4.4.10 No. 2 Shingle Cedar, Grade Code L 10-14

10.4.4.11 No. 3 Shingle Cedar, Grade Code M 10-15
10.4.5 Cypress Grades 10-15
10.4.5.1 No. 1 Lumber Cypress, Grade Code D 10-15
10.4.5.2 No. 2 Lumber Cypress, Grade Code F 10-16
10.4.5.3 No. 2 Sawlog Cypress, Grade Code H 10-17
10.4.5.4 No. 3 Sawlog Cypress, Grade Code I 10-17
10.4.6 Fir and Pine Grades 10-18
10.4.6.1 No. 1 Lumber Fir and Pine, Grade Code D 10-18
10.4.6.2 No. 2 Lumber Fir and Pine, Grade Code F 10-19
10.4.6.3 No. 2 Peeler Fir, Grade Code B 10-20
10.4.6.4 No. 3 Peeler Fir, Grade Code C 10-21
10.4.6.5 No. 2 Sawlog Fir and Pine, Grade Code H 10-23
10.4.6.6 No. 3 Sawlog Fir and Pine, Grade Code I 10-24
10.4.7 Spruce Grades 10-25
10.4.7.1 No. 1 Premium Spruce, Grade Code D 10-25
10.4.7.2 No. 2 Premium Spruce, Grade Code E 10-26
10.4.7.3 No. 1 Lumber Spruce, Grade Code F 10-27
10.4.7.4 No. 2 Lumber Spruce, Grade Code G 10-27
10.4.7.5 No. 2 Sawlog Spruce, Grade Code H 10-28
10.4.7.6 No. 3 Sawlog Spruce, Grade Code I 10-29
10.4.8 No. 4 Sawlog All Coniferous, Grade Code J 10-30
10.4.8.1 Grade Rule 10-30
10.4.8.2 Log Requirements to Make the Grade 10-30
10.4.9 No. 5 Utility All Coniferous, Grade Code U 10-31
10.4.9.1 Grade Rule 10-31
10.4.9.2 Log Requirements to Make the Grade 10-31
10.4.10 No. 6 Utility All Coniferous, Grade Code X 10-31
10.4.10.1 Grade Rule 10-31
10.4.10.2 Log Requirements to Make the Grade 10-32
10.4.11 No. 7 Chipper All Coniferous, Grade Code Y 10-32
10.4.11.1 Grade Rule 10-32
10.5 Broadleaf Species And Yew 10-33
10.5.1 Applicability 10-33
10.5.2 Sawlog, Grade Code W 10-33
10.5.2.1 Grade Rule 10-33
10.5.2.2 Log Requirements to Make the Grade 10-33
10.5.2.3 Chipper, Grade Code Y 10-33
10.6 Applying the Principles of Grading Using Field Methods 10-34
10.6.1 Formula #1 10-34
10.6.2 Formula #2 10-35
10.6.3 Formula #3 10-35
10.6.3.1 For Converting Grade Reduction in Metres to a Percentage 10-35
10.6.3.2 For Estimating Grade Reduction Percentage from Length Losses 10-35

11 Documenting and Reporting Scale

11.1 Scale Documentation 11-3
11.1.1 Introduction 11-3
11.1.2 Documentation Conventions 11-3
11.1.3 Electronic Reporting 11-4
11.2 Scale Returns 11-5
11.2.1 Type of Scale 11-5
11.2.1.1 FS 1211 - Piece Scale Detailed Log Listing (NET) 11-6
11.2.1.2 FS 1212 - Beachcomb Piece Scale Detailed Log Listing (NET) 11-7
11.2.1.3 FS 1217 - Weight Slip 11-8
11.2.1.4 FS 1210 - Sample Scale Detailed Log Listing (NET) 11-9
11.2.2 Electronic Weight Scale Documentation/Reports 11-10
11.2.2.1 Computer Generated Weight Slip 11-13
11.2.2.2 FS 222 - Special Forest Products Scale Return and Transportation Document 11-15
11.2.2.3 FS 200 - Christmas Tree Return 11-16
11.2.2.4 FS 701 - Volume Estimate - Other 11-17
11.3 Administrative Documents 11-18
11.4 Timing Requirements for Submitting Scale Data 11-23
11.4.1 Weight Scale Site 11-23
11.4.2 Piece Scale Site 11-23
11.4.3 Penalties for Late Submission of Scale Returns 11-24
11.4.4 Electronic Submission of Scale Results 11-25
11.5 Scale Data Computation and Documentation Standards and Controls 11-26
11.5.1 Compliance Checking 11-27
11.6 Correction of Errors 11-28
11.6.1 Key Punch/coding Errors 11-28
11.6.2 Measurement/Grade Errors and Missing Dimensions 11-28
11.7 Data Loss 11-29
11.7.1 Conventions to Minimize Data Loss 11-29
11.7.2 Reconstructing Data Which is Lost 11-30
11.8 Access to Scale Data 11-32
11.9 Invoices and Volume Statements 11-33

12 Special Forest Products

12.1 Special Forest Products 12-2
12.2 Definition of Special Forest Products 12-3
12.2.1 Classification as Special Forest Products 12-3
12.2.2 Exporting Special Forest Products 12-4
12.3 General Requirements 12-5
12.3.1 Scaling 12-5
12.3.2 Recording the Scale 12-5

12.4 Special Forest Product Descriptions 12-6
12.4.1 Christmas Trees 12-6
12.4.2 Firewood 12-6
12.4.3 Mining Timbers 12-7
12.4.4 Stakes and Sticks 12-7
12.4.5 Cants 12-11
12.4.6 Posts and Rails (Split and Round) 12-11
12.4.7 Shake and Shingle Bolts, Blocks and Blanks 12-14
12.4.8 Shakes 12-15
12.4.9 Woodchips 12-16
12.4.10 Hogged Tree Material 12-16
12.5 General Requirements 12-17
12.5.1 Timber Marking 12-17
12.5.2 Transport Documentation 12-17
12.5.3 Document Handling for Special Forest Products 12-18
12.6 Special Forest Product Scaling Methods 12-19
12.6.1 Round Piece Sampling Method 12-20
12.6.1.1 Calculation of the Piece Sampling Method 12-21
12.6.2 Stacked Special Forest Products Method 12-23
12.6.3 Christmas Tree Piece Count Method 12-27
12.6.4 Estimating Volumes of Tree Length Piles 12-29
12.6.4.1 Sampling the Pile and Counting Pieces 12-29
12.6.4.2 Measuring the Pile and Applying a Factor 12-30
12.6.5 Finding Piece Sample Requirements 12-33
12.7 Botanical Forest Products 12-35
12.7.1 Medicinal and Pharmaceutical Products 12-36
12.6.2 Wild Edible Mushrooms 12-36
12.7.2 Floral and Greenery Products 12-37
12.7.3 Wild Berries and Fruit 12-37
12.7.4 Herb and Vegetable Products 12-38
12.7.5 Landscaping Products 12-38
12.7.6 Craft Products 12-39
12.7.7 Miscellaneous Botanical Forest Products 12-39
12.8 Other Product Descriptions 12-40
12.8.1 Woodchips and Hogged Tree Material 12-40
12.9 Condensed Table of Half Volumes 12-42
12.9.1 Application of the Table 12-42
12.9.2 Table of Full Volumes for Round Fence Posts 12-45

13 The Weight Scale System

13.1 Weight Scaling - Overview of the System 13-3
13.1.1 Background 13-3
13.1.2 Estimating Volumes Under Weight Scaling 13-3
13.1.3 Objectives of the Weight Scale System 13-4
13.1.4 Elements of Weight Scaling 13-5

13.1.4.1 Agreement 13-5
13.1.4.2 The Weight Scale Sample Plan 13-5
13.1.4.3 Sampling Frequency 13-5
13.1.4.4 Weighing Loads and Processing Samples 13-6
13.1.4.5 Compilation and Reporting Requirements 13-6
13.1.4.6 Unattended Scale Sites (not operated by a Timber Weigher) 13-6
13.2 Statistics Underlying the Weight Scale System 13-7
13.2.1 Statistical Concepts 13-7
13.2.1.1 An Overview of Estimating Using Statistics 13-7
13.2.1.2 Accuracy and Precision 13-9
13.2.1.3 Determining the Sample Size 13-10
13.2.1.4 Stratified Random Sampling 13-11
13.2.1.5 The Weight Scale Sampling Plan 13-13
13.2.1.6 Chapter Summary 13-14
13.3 Summary of Statistical Formulae in Weight Scaling 13-15
13.3.1 Ratio of a Stratum 13-15
13.3.2 Estimate of Total Volume in a Stratum (From a Sample) 13-16
13.3.3 Estimate of Variance of Total Volume in a Stratum (From a Sample) 13-16
13.3.4 Estimate of Variance for Load Volumes in a Stratum (From a Sample) 13-17
13.3.5 Precision of the Estimated Volume of a Stratum (From a Sample) 13-17
13.3.6 Estimate of Total Volume in a Population (Combining Strata) 13-18
13.3.7 Estimate of Variance of Total Volume in a Population (Combining Strata) 13-18
13.3.8 Precision of the Estimated Total Volume in a Population (From a Sample) 13-18
13.3.9 Sample Size (for Planning) 13-19
13.3.9.1 Required for the Population 13-19
13.3.9.2 A Stratum Containing a Pre-specified Target Precision (for Planning) 13-20
13.3.9.3 Sample Size for a Population Containing Some Pre-specified Strata (for Planning) 13-21
13.3.10 Relative Variance of a Stratum (from a Sample) 13-22
13.3.11 Relative Variance of a Population (From a Sample) 13-22
13.3.12 Combining Strata 13-23
13.3.13 Dividing Strata (Splitting of Strata) 13-23

14 Weight Scale Sampling

14.1 Setting Up the Sampling Plan 14-3
14.1.1 Defining the Weight Scale Population 14-3
14.1.1.1 The Sampling Plan 14-4
14.1.2 PSY 14-5
14.1.3 Setting the Sampling Objectives 14-5
14.1.3.1 Sampling Objectives 14-5

14.1.3.2 Precision Requirements 14-5
14.1.4 Stratification to Meet the Sampling Objectives 14-6
14.1.4.1 Why We Stratify 14-6
14.1.4.2 How are the Objectives of Stratification Met 14-6
14.1.4.3 Common Stratification Methods 14-10
14.1.5 Determining and Allocating the Sample Size 14-12
14.1.5.1 Subsampling 14-14
14.1.6 Selecting and Processing Samples 14-14
14.2 Monitoring Sampling Plan Progress and Weight Scale Results 14-16
14.2.1 During the Sampling Year 14-16
14.2.2 At Year-end 14-16
14.3 Managing the Sampling Plan 14-19
14.3.1 Management Responsibility 14-19
14.3.2 Revising the Sampling Plan 14-19
14.3.3 Sample Plan Revisions 14-20
14.3.4 Options 14-21
14.3.4.1 Stratum 01 14-22
14.3.4.2 Stratum 02 14-22
14.3.4.3 Stratum 03 14-23
14.3.5 Sampling Plan Amendments 14-23
14.3.6 Standard Deviations 14-23
14.4 Operational Procedures to Ensure Sampling Plan Integrity 14-25
14.4.1 Inspecting Loads Before Weighing 14-25
14.4.2 Processing the Load 14-25
14.4.2.1 Previously Scaled Timber 14-25
14.4.2.2 Unscaled Timber 14-26
14.4.3 Managing Sample Loads 14-26
14.4.4 Loads Not Suitable for the Sample Plan 14-27
14.4.5 Importance of Accurate Stratification 14-28
14.4.6 Testing of Weight Scales for Accuracy (Eccentricity Test) 14-28
14.4.7 Records Management at a Weight Scale 14-31
14.4.8 Changes to Scale Data 14-31
14.4.9 Emergency Procedures 14-31
14.5 Emergency Procedures in the Event of a Weight Scale Breakdown 14-33
14.5.1 Breakdown of the Weighing Device (Weight Indicator is Unavailable or Inaccurate) 14-33
14.5.2 Alternatives to Weight Scaling 14-33
14.5.2.1 Responsibilities 14-34
14.5.3 Breakdown of the Weight Scale Computer or Sample Selector 14-34
14.5.4 Procedures 14-34

15 Scaling Administration

15.1 The Roles and Responsibilities for Scaling 15-3
15.2 Scale Site Application and Authorization 15-4
15.2.1 Site Registration 15-4

15.2.2 Applicants Responsibilities 15-4
15.2.3 Ministry Responsibilities 15-4
15.2.4 Scale Site Authorizations 15-6
15.2.4.1 Content of a Scale Site Authorization 15-6
15.2.4.2 Ministry Responsibilities 15-7
15.3 Designating the Place of Scale 15-10
15.3.1 Applicant's Responsibilities 15-10
15.3.2 Ministry Responsibilities 15-12
15.3.3 Scaler and Scale Site Operator's Responsibilities 15-14
15.4 The Training, Examination and Licensing of Scalers 15-15
15.4.1 Scaler Training 15-15
15.4.2 Scaling Examination 15-15
15.4.3 Examination Procedures 15-15
15.4.4 Requirements to Take the Examination 15-16
15.4.4.1 Applications 15-16
15.4.4.2 Payment of Examination Fees 15-18
15.4.5 The Administration of Scaling Licences 15-18
15.4.5.1 Marking Requirements 15-18
15.4.5.2 Review by Unsuccessful Candidates 15-18
15.4.6 Other Examination and Endorsements 15-18
15.4.6.1 Scaling Endorsements 15-18
15.4.6.2 Re-examinations 15-18
15.4.6.3 Other Examinations 15-19
15.4.7 Scalers Oath 15-19
15.5 Authorization and Appointments of Scalers 15-20
15.5.1 Legal Requirement for Authorization and Appointments 15-20
15.5.1.1 Administrative Reasons for Authorization and Appointments 15-20
15.5.2 Terms of Requirements of Authorization and Appointments 15-20
15.5.2.1 Official Scalers 15-20
15.5.2.2 Licensed Scalers 15-21
15.5.2.3 Acting Scalers 15-21
15.5.2.4 Forest Service Scalers 15-21
15.5.3 How to Obtain an Authorization and/or Appointment 15-22
15.5.4 Authorization Conditions 15-23
15.6 Assessing Compliance with Scaling Requirements 15-25
15.6.1 Check Scaling 15-25
15.6.1.1 Purpose of Check Scaling 15-25
15.6.1.2 Conducting a Check Scale 15-25
15.6.1.3 Check Scale Frequency 15-26
15.6.1.4 Division of Responsibilities – The Scaler 15-26
15.6.1.5 Division of Responsibilites – The Site Operator 15-26
15.6.2 Checks to be Made 15-27
15.6.2.1 Piece Scale 15-27
15.6.2.2 Weight/Sample Scale 15-27
15.6.2.3 Special Forest Products - Stacked 15-28
15.6.2.4 Special Forest Products - Piece Sampling 15-28

15.6.3 Actions on Completion of the Check Scale 15-28
15.6.3.1 Check Scale Advisory 15-28
15.6.3.2 Replacement of the Original Scale by a Check Scale 15-28
15.6.3.3 Update Scaler File and Records 15-29
15.6.3.4 Second Check Scale 15-29
15.6.3.5 Second Scales 15-30
15.6.3.6 Suspension of a Scaling Licence 15-30
15.6.3.7 Cancellation of a Scaling Licence 15-31
15.6.4 Scale Site Inspections 15-31
15.6.4.1 Purpose of Scale Site Inspections 15-31
15.6.4.2 What to Expect From a Scale Site Inspection 15-31
15.6.4.3 Actions on Completion of a Scale Site Inspection 15-34

Appendices

Appendix 1 Standards for Computing Log and Segregation Volumes A-2

Glossary of Terms

Figures

Figure 1.1 The B.C. Log Rule..... 1-3
Figure 1.2 The Smalian Formula. 1-4
Figure 1.3 Scaling in B.C. – Principal Events. 1-6
Figure 4.1 The Smalian Formula. 4-2
Figure 4.2 Depictions of Three Typical Log Forms. 4-4
Figure 4.3 Graph of the Effects of Taper on Log Volume..... 4-5
Figure 4.4 Two Ways to Visualize Smalian's Formula. 4-6
Figure 4.5 Measurements for Finding the Values..... 4-7
Figure 5.1 Basic Parts of the Official BC Metric Scale Stick. 5-5
Figure 5.2 Sides and Edge of a BC Metric Scale Stick. 5-6
Figure 5.3 Locating Centimetres from the Edge of a BC Metric Scale Stick. 5-7
Figure 5.4 Scale Stick Edges Showing the Red Markings for Length Measurements. 5-8
Figure 5.5 Using the BC Metric Scale Stick to Calculate Half Volumes. 5-9
Figure 5.6 Use of the Side and Edge of the Stick in Calculating 2 m Half Volumes. 5-10
Figure 5.7 Obtaining Unit Volumes (or 5-11
Figure 5.8 Using the Side and Edge of the Stick for Lengths in Tenths of Metres. 5-12
Figure 5.9 BC Metric Log Scale Stick – Specifications Sketch. 5-16
Figure 6.1 The Method for Measuring and Averaging Diameters..... 6-6
Figure 6.2 The Method for Measuring Shattered and Split Back Ends. 6-7
Figure 6.3 The Method for Measuring Irregular Diameters – Except Flared Butts. 6-8
Figure 6.4 The Method of Measuring Butt Diameter by Callipering. 6-11
Figure 6.5 Method of Measuring Butt Diameter by Projecting the Normal Log Taper. 6-13
Figure 6.6 Length Measurement of Logs Through the Geometric Centre. 6-15
Figure 6.7 Length Measurement of Logs with Undercut. 6-16
Figure 6.8 Length Measurement of Logs and Slabs with Segment Under 10 cm. 6-17
Figure 6.9 Length Measurement of Logs with Shattered End. 6-18
Figure 6.10 Length Measurement of a Partially Bucked Split Back (sniped) End. 6-19
Figure 6.11 Length Measurement of a Log with Missing Chunk. 6-20
Figure 6.12 Length Measurement of Foreked Logs..... 6-21
Figure 6.13 Length Measurements of Logs with Sweep. 6-22
Figure 6.14 Length Measurement of Logs with Crook..... 6-22
Figure 6.15 Typical Slab Shapes. 6-23
Figure 6.16 Measurement of a Semicircular Slab End. 6-24
Figure 6.17 Measurement of a Semicircular Slab End with Hole. 6-26
Figure 6.18 Measurement of a Sector Slab End with Hole..... 6-28
Figure 6.19 Measurement of Sectors (pie wedge slab ends). 6-29
Figure 6.20 Measurement of Four-sided (quadrilateral) Slab Ends. 6-33

Figure 6.21 Measurement of Triangular or Wedge-shaped Slab Ends. 6-35
Figure 7.1 The Geometric Shapes Used in Scaling and Firmwood Deductions. 7-4
Figure 7.2 A Log with Butt Rot – One End Visiable 7-13
Figure 7.3 A Log with Butt Rot – Through Running. 7-15
Figure 7.4 A Log with Conical Catface. 7-19
Figure 7.5 A Log with a Double Conical Catface. 7-22
Figure 7.6 A Log with Through-running Heart Rot. 7-25
Figure 7.7 A Log with Partial Length Heart Rot. 7-28
Figure 7.8 A Log with Through-running Ring Rot 7-34
Figure 7.9 A Log with Partial Length Ring Rot. 7-36
Figure 7.10 A Log with Through-running Pocket Rot. 7-40
Figure 7.11 A Log with Partial-length Pocket Rot. 7-43
Figure 7.12 A Log with Partial-length Triangular Defect. 7-45
Figure 7.13 A Log with Sap Rot. 7-48
Figure 7.14 A Log with Missing Segment. 7-51
Figure 7.15 A Log with Sector Defect Extending to the Heart. 7-54
Figure 8.1 Minimum Dimensions for Recovery. 8-6
Figure 8.2 Weather Checking. 8-8
Figure 8.3 An Example of Irregular Surface Checks 8-8
Figure 8.4 An Example of a 'Skipping' Irregular Surface Checks 8-9
Figure 8.5 Measuring Twist – Placing the Stick. 8-12
Figure 8.6 Measuring Twist – Reading the Deflection. 8-12
Figure 8.7 Measuring Knot Diameters 8-13
Figure 8.8 Measuring Bunch (cluster) Knots. 8-15
Figure 8.9 Assessing Knots – Coast and Interior 8-16
Figure 8.10 Knots and Midpoint. 8-17
Figure 8.11 Oversized Knots Distributed Over Entire Surface. 8-18
Figure 8.12 Oversized Knots Near the Top of the Log 8-18
Figure 8.13 Oversized Knots on One Side 8-18
Figure 8.14 Measuring Compression Wood (the shaded area is the area of grade consideration). 8-21
Figure 8.15 Examples of Logs with a Portion of the Collar Too Thin to Produce Lumber. 8-28
Figure 8.16 Examples of Logs with Entire Collar Too Thin to Produce Lumber. 8-28
Figure 8.17 Examples of Logs with Sufficient Collar to Produce Lumber. 8-28
Figure 8.18 Sap Rot. 8-29
Figure 8.19 Advanced Sap Rot. 8-29
Figure 8.20 Residual Core is a Grade Reduction. 8-30
Figure 8.21 Shaded Areas are Unsuitable for the Recovery of Lumber. 8-31
Figure 8.22 Slabs with Portions Meeting the Grade Rule. 8-32
Figure 8.23 Measure Minimum Thicknesses at Right Angles to the Grain 8-33
Figure 8.24 The Application of Trim Allowance Around Heart Rot and Hole. 8-36
Figure 8.25 Collar Too Thin to Cut Lumber e. 8-38
Figure 8.26 Trim and the Twenty Percent Rule. 8-39
Figure 8.27 Simple Butt Rot. 8-40

Figure 8.28 Through Running Butt Rot. 8-41
Figure 8.29 Irregular Butt Defects in a Fluted Butt Log. 8-42
Figure 8.30 Ring Shake and Both Collar and Core are Thick Enough to Produce Lumber. 8-43
Figure 8.31 Ring Shake and Only the Core is Thick Enough to Produce Lumber. 8-44
Figure 8.32 Ring Shake and Only the Collar is Thick Enough to Produce Lumber. 8-45
Figure 8.33 Both Core and Collar Meet the Grade Rule. 8-46
Figure 8.34 Only the Collar Meets the Grade Rules. 8-47
Figure 8.35 Only the Core Meets the Grade Rule. 8-48
Figure 8.36 Muliple Ring Rot and the Firmwood Between Rings is Less Than 5 Rads 8-49
Figure 8.37 Multiple Ring Rot and the Firmwood Between Rings is 5 Rads or More. 8-50
Figure 8.38 Partial Ring Rot 2 Rads Thick. 8-52
Figure 8.39 Irregular Heart Check. 8-54
Figure 8.40 Extensive Surface Checking. 8-55
Figure 8.41 Trim Allowance for Check and Split in Relation to Collars. 8-55
Figure 8.42 Trim Allowance for Multiple Heart Check. 8-56
Figure 8.43 The Application of Trim Allowance to Off Centre Defects. 8-57
Figure 8.44 The Application of Trim Allowance to Overlapping Defects. 8-58
Figure 8.45 Logs Shorter Than 5 Metres are Assessed on Their Length. 8-59
Figure 8.46 Logs 5 Metres and Longer are Assessed in 2.5 Metre Segments. 8-60
Figure 8.47 Log with Spiral Heart Check. 8-60
Figure 8.48 Short Breakage Pieces Contained in a Conventional Load. 8-62
Figure 8.49 Rat Tail Tops Delivered with a Short Segment Over 10 cm. 8-63
Figure 8.50 Assessing Grade in Log with Severe Heart Rot and Residual Length is Too Short to Cut Lumber. 8-64
Figure 8.51 Examples of Short Logs Left After Bucking at the Scale Site and Deemed to be 2.5 m Long (Interior) and 5.2 m Long (Coast). 8-65
Figure 8.52 Example of Logs Cut to Special Forest Product Lengths but Not Classified as Such and Deemed to be 2.5 m Long (Interior) and 5.2 m Long (Coast). 8-66
Figure 8.53 Visually Bucking a Log with Crook to Assess Lumber Recovery. 8-67
Figure 8.54 Visually Bucking a Log with Pistol Grip to Assess Lumber Recovery. 8-67
Figure 8.55 Visually Bucking a Log with Sweep to Assess Lumber Recovery. 8-68
Figure 8.56 An Ellipse Shape is Created When Sweep Misaligns the Two Ends of a Log. 8-68
Figure 8.57 Measuring the Offset for 2.5 m Log. 8-70
Figure 8.58 Measuring the Offset of Logs 2.5 m to 4.9 m. 8-71
Figure 9.1 Measuring Diameter for Interior Undersize Grade. 9-3
Figure 9.2 Knot Spacing Measurement. 9-7
Figure 11.1 FS 1211 – Piece Scale Detailed Log Listing (NET) 11-6

Figure 11.2 FS 1212 – Beachcomb Piece Scale Detailed Log Listing. 11-7
Figure 11.3 FS 1217 – Weigh Slip..... 11-8
Figure 11.4 FS 1210 – Sample Scale Detailed Log Listing (NET). 11-9
Figure 11.5 Weight Scale Safety Sheet Example. 11-10
Figure 11.6 Weight Scale Daily Audit Log Example. 11-11
Figure 11.7 Weight Slip Example. 11-13
Figure 11.8 Example and Instructions for Completing the Special Forest Products Scale Return and Transportation Document. 11-15
Figure 11.9 FS 200 – Load Description Slip/Christmas Tree Scale Return. 11-16
Figure 11.10 FS 701 – Volume Estimate - Other 11-17
Figure 11.11 Site Arrival and Departure Ledgers. 11-20
Figure 11.12 FS 649 – Load Description Slip. 11-21
Figure 12.1 Flow Diagram Outlining Selection of Scaling Methods and Forms. 12-18
Figure 12.2 A Pile of Posts Sorted to Size Classes and Ready for Sampling. 12-21
Figure 12.3 Completed FS 222 for 100 Round Fence Posts. 12-22
Figure 12.4 Completed FS 701 – Volume Estimate – Other Summarizing the FS 222 in Figure 12.3. 12-23
Figure 12.5 Completed FS 222 with Split Product. 12-25
Figure 12.6 A Completed FS 701 – Volume Estimate – Other – Summarizes the Information from the FS 222 in Figure 12.7. 12-26
Figure 12.7 A Completed FS 701 – Volume Estimate – Other Which Summarizes the Information on the FS 200. 12-28
Figure 12.8 Selecting a Sample Section from a Log Deck. 12-29
Figure 12.9 Two Methods of Measuring the Length and Height of a Pile. 12-31
Figure 12.10 Finding the Average Width of a Pile by Averaging Five Representative Tree Lengths..... 12-32
Figure 12.11 Squaring Up a Pile by taking Length Measurement at Exactly One-half the Height of the Pile. 12-32
Figure 13.1 A Loaded Logging Truck on the Platform of a Weight Scale..... 13-2
Figure 13.2 Conceptual Formula for Estimating Volumes. 13-4
Figure 13.3 Conceptual Overview of Weight Scale Sampling. 13-9
Figure 13.4 In this Dartboard Example, the 3 Darts (x) are Precise but Inaccurate and Biased. 13-10
Figure 13.5 Graphs to Show the Impact of Stratification. 13-13
Figure 14.1 An Approved and Active Sampling Plan as Shown in HBS Stratum Advisor. 14-15
Figure 15.1 An Example of an Application for a Scale Site (FS 1309)..... 15-5
Figure 15.2 An Example of a Scale Site Authorization Letter. 15-9
Figure 15.3 enter fig name here. 15-11
Figure 15.4 Example of a Mark Site Designation (page 1). 15-13
Figure 15.5 Example of an Application to Take a Scaling Exam/Appointment as an Acting Scaler/Authorization to Scale at a Site..... 15-17
Figure 15.6 Completed Application for Authorization to Scale. 15-22
Figure 15.7 An Example of an Authorization to Scale (Page 1). 15-24
Figure 15.8 Scaling Site Inspection Report (Page1). 15-32

Tables

Table 5-1 Volumes of One Metre Cylinders in Cubic Decimetres..... 5-13

This page is intentionally left blank.

Scaling Overview 1

1.1 The Role of Scaling and its Importance

Scaling plays an essential role in meeting the needs of both government and industry. This chapter provides an overview discussion on:

- the role and importance of scaling,
- the evolution of B.C.'s scaling practices, and
- of the legal and administrative framework for scaling.

The following chapters in this manual describe B.C.'s scaling practices in detail.

Scaling plays a very important role for government, the forest industry and other users of scale data. For government, scale data is used to invoice the forest industry for stumpage (in 2006 almost $1.2 billion in stumpage was billed) and to administer the cut. For the forest industry, scale data is the basis for many transactions, including buying and selling forest products, and contractor payment. In fact, many parties are dependent on an accurate and meaningful scale. The scaler is the most significant player in providing this assurance.

As discussed in the following sections, scaling practices in British Columbia have adapted and evolved to meet the needs of the consuming wood industry, government and other parties with an interest in the scale.

1.1.1 Cruise Based Tenures

These tenures are not scale based and are not meant to be scaled. Instead an estimate of volume is done under the cruise regime and licensees are billed on that basis. Scalers, when receiving timber, should take care that they are familiar with the billing method of the tenure.

Refer to the *Cruising Manual* for more information.

1.2 The Evolution of BCs Scaling Practices

Scaling in British Columbia is rich in history. An understanding of this history provides an insight into today's scaling practices and their roles and relationships in forest administration.

1.2.1 British Columbia's Official Scales

The earliest scaling in British Columbia consisted of the licensee or lessee keeping a written account of the number of trees felled on a tract of land. Each month, the operator submitted a sworn statement of trees felled and accepted responsibility to pay dues based on this count. The term "stumpage" arose from this crude procedure. While the approach enabled a fast and accurate check on the statement of trees felled and dues payable by simply counting stumps, it failed in providing meaningful information for buyers and sellers about value, volumes and quality. The need for a more accurate and versatile scale was soon identified.

In 1895, the British Columbia Board Foot Log Scale was established as the official scale. It was used to determine scale in foot board measure (BCFBM). The Scribner, Decimal C and Doyle Log rules were used along side the B.C. Log Rule until 1915 at which time they were no longer accepted for government measurement purposes. The B.C. Log Rule was derived mathematically and was tempered with certain arbitrary assumptions.

$$V_{FBM} = .0476(D-1.5)^2 L$$

where: V_{FBM} = volume in foot board measure (board feet),

D = small end diameter in inches, and

L = length in feet.

Figure 1.1 The B.C. Log Rule.

The resulting formula yielded the number of board feet of lumber (rough, green) that could be cut from logs of a given length and small end diameter. The formula was later modified to better account for longer logs.

While the B.C. Log Scale provided satisfactory results of the timber profile harvested when the rule was first introduced, later forest exploration in the 1930s saw the harvest of smaller timber and the production of longer logs. Scale results quickly came under criticism from buyers and sellers, and scalers were accused of manipulating scale results to the benefit of their employer. This problem is inherent of scale rules just as much today as it was then. Consistent and accurate results can only be expected when the timber profile and processing practices are within the often narrow confines of that assumed in the log rule. By the 1940s, over 50% of the provincial cut was converted into products other than lumber, and as such, users of scale data often had little interest in a scale premised on lumber recovery.

In 1946, an amendment to the *Forest Act* introduced the British Columbia Cubic Scale. The amendment followed the 1945 Sloan Royal Commission Report, which set out a blueprint for the introduction of sustained yield forestry practices to the province. The cubic scale was introduced as a means of developing information that would be more useful for the Forest Service in reconciling forest depletion with its inventory.

In contrast to the British Columbia Log Scale, that attempted to estimate the amount of lumber that could be produced from a log, the cubic scale made no allowance for wood wasted in slabs and kerfs, and only attempted to estimate the volume of the log suitable for the manufacture of lumber. The Cubic Scale was not expressed in foot board measure (FBM), but rather cubic feet (or 'cunits', representing 100 cubic feet).

Initially, the cubic scale was known as the B.C. Lumber Cubic Scale because the scale made allowances for log defects such as twist, crook, knots, shake, and split. It also allowed for collars of sound wood around holes and rot recognizing that defects must be 'squared out' in the manufacture of lumber.

During the mid-1960s, with the introduction of Close Utilization Standards, the references to lumber manufacture were dropped from scaling and the scale only represented the net firmwood content of each log. The only permissible deductions for scaling purposes were rot, missing and charred wood, and catface. This scale became known as the B.C. Firmwood Cubic Scale.

When first introduced in 1946, the use of the cubic scale was optional and licensees could use either an FBM or cubic scale. In 1952, all new sales made provision for cubic scale, and in 1972, both FBM and lumber cubic scales were no longer authorized for use. Metrication in 1979 saw the B.C. Metric Cubic Scale proclaimed as the only official scale for British Columbia, and it remains so today.

From the inception of cubic scaling, the Smalian formula (Figure 1.2), which calculates logs on the basis of a parabolic frustum, was adopted as the cubic scale rule. This scale requires measurement of the two inside bark diameters and the length.

$$V = \frac{A_1 + A_2}{2} \times L$$

where: V is the volume of the log in m^3.

A_1 is the area of the small end of the log in m^2.

A_2 is the area of the large end of the log in m^2.

L is the length of the log in m.

Figure 1.2 The Smalian Formula.

The elimination of the FBM log scale was met with much resistance from the forest industry, and was an eddy of controversy from within government as well as within

industry. Although cubic scaling represented a stronger and more consistent basis for forest depletion and revenue collection for government, the industry was very reluctant to base commercial transactions on a scale that had a different relationship to product output. Dual scales in cubic and FBM became commonplace and are common to this day, as are the use of conversion factors to better relate scale data to a given product.

The Scribner Decimal C Scale is still the basis for most forest commerce in the western United States and Alaska, as well as in the Asian markets. Similarly, there is still a demand for scalers with experience using the B.C. Log Scale (FBM), even though it was removed from official use years ago.

The use of dual scales clearly reflects the observation that one scale often does not satisfy all needs.

Significant Events in BC Scaling and Grading History

1884	Scribner's Lumber and Logbook, Doyle Rule (F. B. M.) used as basis for scaling.
1894	Provision for Appointment of Official Scalers under the Official Scalers Act.
1895	BC Board-foot Log Scale (FBM) established as the official scale.
1902	Log grades first established made official by Timber Measurement Act, 1902.
1912	Provision for Re-scales to be made, also the issuance of licences (proclaimed under the first BC *Forest Act*, which also established the BC Forest Service).
1915	Doyle rule no longer accepted, new log grades for cedar, fir, spruce, pine and cottonwood are introduced on the Coast.
1920	Scaling fund established, official scalers were given the opportunity to apply for civil service status.
1944	Cubic measure first authorized for use - BC Cubic Scale (Lumber Cubic).
1948	Hemlock log grades introduced on the Coast.
1952	New timber sales and TFL permits to be scaled by BC cubic scale - Dual scale performed (i.e., Cubic Scale and BCFBM).
1963	Weight scaling introduced in BC Interior.
1965	Firmwood cubic scale introduced (FBM and cubic).
1972	BC Log Scale (FBM) and lumber cubic discontinued.
1979	Metric Scale replaced Imperial firmwood cubic (BC Metric Cubic Scale proclaimed the official scale for BC).
1979	Alleged scaling incident at Shoal Island.
1980-81	Portable data recorders for scaling developed by the Ministry and Epic Data Ltd.
1981	Coastal letter grades adopted (change from numeric to letter grades).
1985	Revenue scaling was privatized.
1988	Log grading was introduced to the Interior (Sawlog, Lumber Reject, Firmwood Reject grades).
1988	Provision made for industry to transmit scale data electronically.
1989	Auditor General Review cites shortcomings in scaling and scale controls.
2003	New Harvest Billing System introduced. Electronic system for all sites scaling over 500 m3 annually.
2006	New Interior grades introduced. Grades 3 & 5 are eliminated.

Figure 1.3 Scaling in B.C. – Principal Events.

This is an itemized list of some of the historically significant scaling event in BC. For more information on scaling history read: *Without Fear or Favour – Culling and Scaling Timber in Canada 1762-1992*, by T.G. Honer.

1.2.2 History of Log Grading in BC

Grading timber dates back to 1902 on the BC coast. Timber is graded to provide information about potential end use and log quality. It also makes scale data more meaningful for administering the provincial cut for various business transactions.

Grading is regulated by schedules of timber grades specific to the coast and the interior under the *Scaling Regulation*.

Official scale rules (same as log rules) set the standard for estimating the net yield from logs. Since timber was first measured in BC in the mid-1800's five official scales have regulated timber measurement.

Official Scale		**Yield Estimate: Units of**
Prior to 1894	Foley and Doyle Log Rules	Board feet of lumber
1895	British Columbia Board Foot Scale (FBM)	Board feet of lumber
1844	British Columbia Cubic Scale (lumber cubic)	Cubic feet suitable to cut lumber
1985	British Columbia Firmwood Cubic Scale	Cubic feet of firmwood
1979	British Columbia Metric Scale	Cubic metres of firmwood

The significance of these official scales to grading lies in the fact that some of the practices and conventions followed in applying today's grading rules are very similar to those used in applying some of the official scales developed over 100 years ago.

Grading played a much lesser role in the interior until 1988, at which time a formal schedule of grades was introduced to better differentiate timber quality and to accommodate revisions to the utilization and timber pricing policies.

Significant growth in the interior forest sector did not get under way until the mid 1960s. The first interior grading system was introduced in 1988 to enable reduced stumpage rates to be applied to lower quality logs. The interior schedule was subsequently amended in 1990 to meet the needs of a new utilization policy. The most recent major revisions were made in 2006 with a change to the Schedule of Interior Timber Grades. This change, developed jointly with ministry and industry, redefined the two sawlog grades with respect to size, quality and quantity, and with the elimination of the 'dead and dry' grades, merged the two lumber reject grades into one.

While the early very basic schedule of timber grades evolved and expanded greatly in response to changing demands and needs to make scale data more relevant for its many users, the principles of grading have changed very little over the years.

Logs scaled using B.C. Metric Cubic Scale will be represented in cubic metres for volume and will use the applicable Schedule of Timber Grades for either the Coast or the Interior.

1.2.3 The Roles and Responsibility for Scaling

The appointment and licensing of scalers has remained a responsibility of government since 1894 with the proclamation of the Official Scalers' Act. While the Pacific Northwest States moved towards the concept of a third party scale under log scaling bureaus jointly funded by buyers and sellers, the provincial government policy until 1985 saw provincial employees conducting almost all scaling for revenue purposes. Non-government licenced scalers were authorized for scaling only where government scalers were not available, or where timber values were considered low.

Government scalers were not commonplace in the interior until the early 1960s because the less significant interior harvest was largely processed through many small bush mills. Rapid expansion of the interior forest industry occurred during the 1960s with the introduction of pulp mills and the consolidation of the industry.

British Columbia's policy on scaling is rooted in the province owning over 90% of the forest land base. During the 1960s and 1970s, this arrangement saw some 450 to 500 government scalers trained and supervised by the province. While various funding arrangements were in place, the industry traditionally absorbed the costs of scaling.

In 1985, the responsibility for all revenue scaling was transferred to the private sector. Several factors contributed to this policy change:

- it reduced the direct costs of government,
- it removed any potential union interface problems between government scalers and industry workers, and
- it reduced government interference with industrial operations and allowed industry more flexibility in staffing and operating scaling stations.

Government's role in scaling is now comprised of the following activities:

- Examining and licencing scalers,
- Authorizing and appointing scalers and setting all revenue scaling policies and procedures,
- Authorizing scale sites and setting scale site conditions,

- Designating where timber must be scaled,
- Setting scale data computation and data control procedures and standards, and
- Assessing compliance with scaling requirements and standards.

1.2.4 Scaling Methods

Scaling accounts for some 98% of the provincial harvest. Less than 2% of the harvest is accounted for through a cruise-based measurement procedure. The cruise-based procedure is confined to the interior's uniform stands and has a minimal presence on the coast. In BC, two principal scaling methods are in place:

- Piece Scaling, and
- Weight Scaling.

1.2.4.1 Piece Scaling

Piece scaling or stick scaling accounts for some 69% of coastal production and about 3% of interior production. This procedure involves measuring and grading each log, usually while they are spread out in a log yard or rarely now, in a log boom floating in the water.

Before the introduction of weight scaling in the early 1960s and dryland sorts in the 1970s, almost all coastal production was piece-scaled in the water in the form of booms. Today, piece scaling through dryland sorts accounts for about 69% of the coastal piece scale production and less than 3% is still scaled on the water. Dryland sorts are flat areas, usually paved, where loads are lifted out of the water or offloaded from logging trucks and spread onto the ground for scaling, grading and subsequent sorting. Accurate scaling is greatly facilitated through dryland sorts as the scaler can view almost the entire log. With boom scaling, only a small surface was available for inspection.

Interior piece scale production is predominantly in the form of small operator scaling, usually in the millyard. The identity of each scaled load is retained for control purposes. A listing of scale details is also maintained for all logs scaled.

1.2.4.2 Weight Scaling

Instead of scaling each piece, weight scaling is a sampling method where only a portion of the total production is measured or sampled. Based on the sample results estimates are made about the production.

The 1960s and 1970s saw the rapid growth of BCs interior forest industry fuelled by the construction of pulp mills and the resultant demand for sawmill residues. Over the same period, government policy provided incentives for licensees to adopt close utilization standards in the bush. This coupled with improvements in sawmilling technology resulted in truckloads arriving at the scale site with dramatically smaller average log size and increased number of pieces on the truck. Weight scaling represented an opportunity

to estimate harvested volumes with an acceptable level of accuracy and lower costs than scaling each piece.

When first introduced in the early 1960s, weight scaling was restricted to homogeneous small diameter spruce and lodgepole pine stands. Its use was expanded as confidence was gained using the method. Today, over 97% of interior production is weight scaled.

On the coast, less homogeneous forest types, more complex sorting and marketing needs, and more complex transportation and log handling methods have impaired the acceptance of weight scaling. While weight scaling offered the same cost savings, it also represented an opportunity to account for logging production before it was put into the water and transported to processing plants. During the 1960s, almost all the coastal logging production was stick scaled while it was boomed in the water. Sinkage often accounted for very significant losses before the logs were scaled. If logs were weighed before they were watered, depletion could be correctly stated and Crown revenues could be controlled. Obviously, the Forest Service encouraged weight scaling for coastal operations.

Weight scaling grew in prominence on the coast during the 1970s and early 1980s but lost in prominence during the 90s with the growth of dryland sorts. Weight scaling on the coast now accounts for more than 30% of the total harvest.

1.2.4.3 Special Forest Products

Instead of raw logs, sometimes partially or fully manufactured products are scaled. These are known as special forest products.

Special forest products comprise about 3% of forest production in BC and include Christmas trees, posts, stakes, shakes and shingles, bolts and blocks, and other products as described in the Special Forests Products chapter of this manual. To be classified as a special forest product, the product must conform to the product description, be contemplated in the cutting authority (for Crown timber), and be manufactured on the area of harvest.

For scaling, the scaler does a piece count or uses a variety of approaches to estimate the volume. All special forest products except Christmas trees are recorded in cubic metres for cut administration and reporting purposes.

See the *Special Forest Products* and *Document Submission* chapters of this manual for details on scaling, documentation and submission requirements for Special Forest Products.

1.3 The Legal and Administrative Framework for Scaling

1.3.1 General

The legal and administrative framework for scaling in British Columbia is set by Part 6 of the *Forest Act* and the *Scaling Regulation*. This legislation contains the authority for scaling and sets out the requirements of scaling. It is applicable to all timber cut from both publicly and privately owned land within provincial jurisdiction. This legislation does not apply to timber cut on lands falling under federal jurisdiction. Such timber includes timber cut on native or military reserves.

1.3.2 The *Forest Act* – Part 6 – Timber Scaling

Section 93 – Interpretation

The term "to Scale" under the *Forest Act* means:

- To determine the volume of quantity of timber and,
- to classify the quality of that timber.

Timber under the *Scaling Regulation* is defined as trees, whether standing fallen, living, dead, limbed, bucked or peeled and includes Special Forest Products.

For more information on scaling legislation and regulations please follow the links below:

Scaling Regulation

Forest Act – Part 6

MOFR Policy Manual

This manual and BC Forest Service Scaling Policy fall within the same legislative framework and further define how scaling will be practiced and administered.

All roundwood scaling procedures must conform to the minimum criteria for scaling roundwood in metric units and minimum specifications for scaling instruments established in the Canadian Standards Association (CSA) Standard CAN3-0302.1-M86, Scaling Roundwood, and the *Weights and Measures Act*.

1.3.3 The *Forest Act* – Part 6 – Timber Marking

The authority for timber marks, scaled timber brands and marine log brands and the responsibility for their use is set under Part 5 of the *Forest Act*. The *Timber Marking and Transportation Regulation* prescribes how marks and brands are to be applied to timber. The Regulation also requires all unscaled timber to be transported only to scale sites

designated by a forest officer and prescribes documentation requirements which must accompany all timber in transport.

While timber marking does not generally fall under their responsibilities, scalers are required to record timber marks as a part of recording scale results. As such, scalers must have a working knowledge of timber marks, scaled timber brands, and marine log brands as well as the requirements for timber marking and branding.

To Summarize:

Timber carrying a *timber mark* tells you:

- the timber mark identifies the cutting authority under which the timber is harvested. This information can then be used to identify the area of origin, the identity of the mark holder, the exportability of the timber, and whether fees must be paid.

Timber carrying a *marine log brand* tells you:

- the timber has been scaled, and
- the holder of the brand (who owns the timber).

A *marine log brand* does not tell you where the timber was scaled and its use is optional.

Timber carrying a *timber brand* tells you:

- the timber has been scaled, and
- where it was scaled.

It does not designate ownership. Its use is mandatory, as per the *Timber Marking and Transportation Regulation* and the *Forest Act – Part 5 – Timber Marking*.

For a more detailed explanation of Timber Marks and their forms refer to the *Timber Marking and Branding* chapter of this manual.

1.4 Who Can Scale?

This schematic further defines who may be authorized to scale under various circumstances under *Forest Act* subsection 94(1) and 94(2).

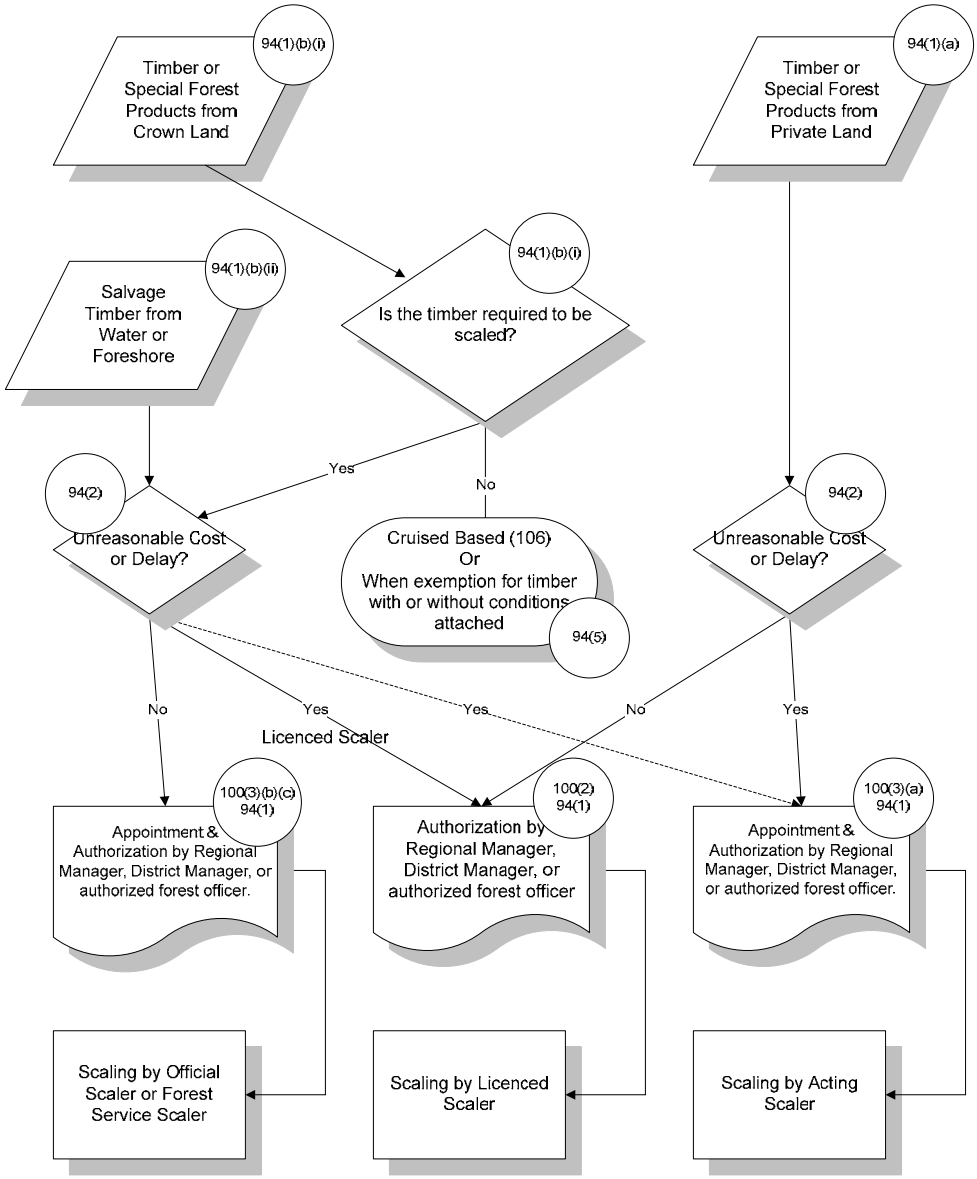

The intent underlying subsection 94(1) and 94(2) is to ensure that Crown timber is scaled by the most competent and qualified scaler available.

1.5 Scaling Requirements in British Columbia

If you are going to apply for a timber sale licence, cutting permit or some other licence to harvest Crown timber or harvest timber on private land, it is important that you understand some of the basic scaling requirements in advance.

The following link will take you to the MOFR Revenue Homepage to an information paper which explains:

Scaling Requirements in British Columbia

Timber Marking and Branding 2

Tenure is the mechanism by which the government transfers specific rights to use Crown or public forest and range land and resources. Timber tenure agreements prescribe how and to whom rights to timber on Crown land will be awarded. Under the *Forest Act*, no timber may be removed from either Crown or private land unless the timber is marked with a Timber Mark. Timber marks are used to identify the specific cutting authority or geographic location where the timber was harvested as well as other specific information. They are issued by the Forest Service and consist of unique sets of letters, numbers and sometimes other characters which are stamped or written on the ends of logs.

Timber Brands are also issued by the Forest Service and identify timber which has already been scaled and where it was scaled.

Each year the provincial timber harvest comes from harvesting conducted on some 40 000 active timber marks. Transport of this harvest to the place of scaling or a transport point for forwarding, sees the movement of almost two million truckloads of logs annually.

Timber marks and brands play an important role in ensuring timber is transported and scaled in a controlled manner. It ensures that harvested timber is correctly accounted for.

This chapter discusses:

- requirements which must be met before timber can be transported off the area of harvesting,
- the different types and categories of timber marks and brands as well as their purpose,
- requirements for applying timber marks and brands,
- log salvage identification marks and their use,
- the scaler's responsibilities, and
- the availability of websites for applications and information about timber marks/brands and related information.

2.1 Registered Timber Marks

To harvest and transport timber off either private or Crown land, you must:

1. a. For private timber, obtain a timber marked certificate,

   b. for Crown timber, hold an agreement under the *Forest Act* as well as a cutting authority or other authorizations as required under the agreement.

2. Complete an application or a Mark/Site Designation. *

3. Mark the timber in accordance with the requirements set by the ministry and with the timber mark described in the timber mark certificate or cutting authority.

All timber marks issued by the ministry are entered on the Timber Mark Registry. Details on the registry include:

- the timber mark,
- the registered owner(s) of the mark,
- the land parcel(s) cover which the mark is valid,
- the issue date and expiry date of mark certificates (maximum five years), and
- the harvesting licence type (for Crown land), issue date and expiry date.

* Scale site designations or Mark Site Designations (MSD) are agreements between the owner of the timber and the Forest Service to transport harvested timber to a specific site for scaling. Application for an MSD is available on the *Public Forms Index*. An application form, letter, email or other must be completed and delivered to scaling staff in the district of the timber's origin. See the *Scaling Administration* chapter for more information.

2.1.1 Purpose of Timber Marks

Timber marks identify the authority under which timber is harvested and are used to identify other information about the timber after it has been removed from the harvesting site. This information includes:

- the stumpage rate, or that the timber is without fee,
- whether or not the timber may be exported from the province without first being manufactured,
- the identity of the mark holder, and
- area of origin.

Timber marks are issued to the owner of the timber (or a person with Power of Attorney) or the holder of the harvesting licence. This identity is essential for assigning financial and other obligations. It is an offence for any person to use a timber mark without express consent of the mark holder.

Timber marks are also viewed as evidence of ownership just like brands on cattle. Under the Criminal Code of Canada, timber marked with a registered timber mark is the property of the mark holder, unless there is evidence to the contrary. The same is true of marine log brands discussed in Section 2.3 of this chapter.

Under the Forest Service policy, only one registered mark may be issued for a given land area. Log ends may carry other information as long as the registered timber mark is not obscured.

Terms for timber marks are set as follows:

1. For Crown Timber - the timber mark expires upon the expiry of the agreement. If the agreement is suspended or cancelled, the timber mark is also suspended or cancelled at the same time.

2. For Private Timber - timber marks held under a timber mark certificate, in most cases, have a maximum duration of five years. The certificate may be renewed upon expiry or with the consent of the applicant, may set a duration of less than five years.

2.1.2 Timber Marking Requirements

Under the *Forest Act* and ministry policy, all timber must be conspicuously marked on the area of harvest as soon as possible after it is cut and prior to any transportation off the area or any manufacture. Unless exempted, timber must be marked in the prescribed manner.

The prescribed manner is set by regulation and is described in the *Forest Act* – Timber Marking and Transport Regulation.

Talk to District Scaling Staff about exemptions to Timber Marking standards.

> Under the *Forest Act*, it is an offence to remove, obliterate or alter a mark that has been applied to timber before the timber has been used in manufacturing.

2.1.3 Requirements of the Scaler

The scaler's principle responsibility is to ensure the timber marks found on the timber are accurately recorded. Where a scaler believes that timber has been incorrectly marked, they should contact the local Forest Service district office as soon as possible.

The scaler must:

- legibly record the mark appearing on the timber according to the documentation requirements set out in the *Documenting and Reporting* chapter of the *Scaling Manual*,
- know what marks are approved for scaling at that scale site through a scale site designation letter or web site access to: Mark Site Designation Site, and
- know what to do if timber arrives at the scale site bearing marks which are illegible, inadequate, invalid or not approved for scaling at that site. Procedures are usually specified in the scale site authorization. If not, the scaler should contact the local Forest Service district office as soon as possible.

> The scaler must be familiar with the scale site authorization as well as their authorization to scale.

2.1.4 Timber Mark Formats

Over the history of registering timber marks the format of the marks has been used to serve many needs. Until recently, timber mark certificates over private land had no expiry. Because of this, many historical mark formats are still in place.

Timber marks are generally comprised of numbers and letters, and may include other distinguishing features, such as crescents and bars. There are some twenty-two classes of timber marks in use and within these classes there are numerous mark styles.

Many different timber mark configurations may be encountered. Contact the local Forest Service office if there is any confusion concerning the validity of a mark or to receive instructions on how to record it.

2.1.4.1 Recording Characters

Record the following special symbols, which may form part of a timber mark, as follows:

Mark Symbol			Data Entry Key
◡ **(** ◠ **)**	(a crescent)	=	**‘** (apostrophe)
⁓	(a wavy line)	=	**:** (colon)
△ **<**	(a delta)	=	**<** (less than symbol)
/	(a slash within mark)	=	***/*** (slash)
▬	(a bar)	=	**-** (hyphen or dash)

Record the number zero, as 0, with no line through it.

Record the alpha character, Ø, with a stroke through it.

Record the number seven without any line through the centre, 7.

Record the letter, I , and ensure it is crossed at the top and bottom, to differentiate it from a one (1) or a lower case L.

Record the letter J**,** with the top crossed to distinguish it from a U.

Record the letter S with an underscore to distinguish it from a 5.

Record the letter Y, not ⅄, to distinguish it from a 4 and a U.

Record the letter Ƶ with a line through it to distinguish the letter from a number 2.

Record the number ㄣ, not 4, to distinguish it from a 9.

2.1.5 Types of Marks

There are two major types of marks:

- those from Provincial Crown and tenures and Federal Crown reserves, and
- those from private and federal lands.

For more information on timber tenures and private marks please go to the Resource Tenures and Engineering Branch website at:

Tenures and Timber Marks

For a comprehensive list of timber mark types please go to the link below:

Timber Mark File Types

2.1.5.1 Major Types of Timber Marks

2.1.5.1.1 Forest Licences and Timber Sale Harvesting Licences

Where more than twenty-six (26) cutting permits will be issued, a "mark designate" is assigned; otherwise the mark follows the format of timber sale licences. These designates consist of two letters and a number followed by 3 alpha/numeric characters. An example of this is Forest Licence A55477. The mark designate is FR8 followed by three characters denoting the applicable cutting permit 63U,

- recorded as FR863U.

2.1.5.1.2 Tree Farm Licence

Tree Farm licence marks will appear 2 alpha/numeric characters underneath. The top numeric designates the licence number and the bottom number designates the cutting permit. These marks are recorded with a slash (/) after the two numbers on top,

- recorded as 23/229.

2.1.5.1.3 Timber Sale Licences

Timber sale licences are all issued in the "A" series, which is the letter A followed by five numbers, often with a letter following denoting the cutting permit . If no cutting permit is required, the mark for licence A12345 would be recorded as: 12345 and the mark for licence X 12345 would be recorded as: <12345. Where cutting permits are required, the designate is attached to the end of the mark,

- recorded as 12345B.

Other types of timber sale licences can be encountered, but in general they all follow the above format for recording on the tally sheet.

2.1.5.1.4 Timber Licences

Timber licences most often appear as a T and four numbers, for example, T1234. If a timber licence agreement includes a cutting permit, it will have the cutting permit in the form of a letter (the designate). The designate is the last alpha/numeric character, so in this context it would be T1234, then followed by the cutting permit identifier, which could be a single letter that is to be recorded at the end,

- Recorded as T1234A.

Since June 2007, a change has occurred in how new timber marks are created for Timber Licences and Woodlot Licences. The new format is TNNNAK where:

T	-	represents the file type Timber Licence.
NNN	-	3 alpha/numeric mark designate. This is system generated.
AK	-	CP identifier supplied by the client. Sometimes this is a single character (the letters I or O cannot be used) and if this is a single character the system will 'pad' it with a zero in front of the cutting permit letter designate.

These new marks can be all alpha characters which is similar to private marks so care must be taken to identify the type of mark that is being recorded.

2.1.5.1.5 Woodlot Licence

Farm Woodlot licences issued under the old *Forest Act* use "FW" on the mark with the number of the woodlot appearing below. Woodlot licences under the present *Forest Act* use a licence number in the "W" series . Generally, marks relating to woodlots are recorded as they appear on the log. However, because several changes have been made over the past few years, the mark may appear with the cut permit indicator in the middle. The marks for Woodlot licences are also systems generated and behave the same way as for a timber licence. There are four alpha characters for the designate, always starting with 'W' and the client supplies the cutting permit identifier which can be a letter or number, but most often a letter. If a single letter is provided by the client the system will 'pad' the identifier with a zero in front of the letter.

2.1.5.1.6 Occupant Licence to Cut

Licences to cut begin with an "L" followed by five numbers as in L12345. Older licences have two letters followed by three numbers. The first letter is always "Y" and

the next letter indicates the region of origin as follows: YC & YW are Williams Lake, YV is Vancouver, YK is Kamloops, YR is Prince Rupert, YN is Nelson, and YG, YH, YE, YD, and YF are all Prince George Forest Region. Some of these historical marks are still in use and so, use historical region codes. This series appears on a hammer mark with the two letters over top of the numbers,

- recorded as YC12345.

2.1.5.1.7 Cash Sale Licences

Cash sale licences are always a "D" or an "A" followed by five numbers. Cash sale timber is "prepaid" and further scaling is not required. Cash sale timber can be scaled for operational needs but returns are not usually required to be submitted. The scaler should confirm the local requirement with the forest district,

- recorded as D12345.

2.1.5.1.8 First Nations Reserves

Timber from First Nations Reserves carries a mark with ID, IN, or IR followed by one, two or three numbers. Z has also been used historically,

- recorded as IR123.

2.1.5.1.9 Road Permits and Rights-of-Way

Old style road permits are assigned with an R, followed by five numbers, the first is commonly zero. This zero must not be recorded as the letter O [Ø],

New style road permit marks are associated to all over arching licences. That would be any licence that allows for cutting permits and has a mark designate. The configuration of the road permit mark is the same as for a cutting permit, it is the **licence designate** followed by three alpha/numeric fields (0R1 – zero, the letter R and a number) depending on how many road marks are required for that licence. One road permit can have many marks. In most instances that will only be one permit of a licence. However, since rates vary between districts, if a licence crosses district boundaries there will be more than one road permit,

- old style recorded as R01234,
- new style recorded as BC50R1.

2.1.5.1.10 Christmas Tree Permit

Christmas trees are not normally marked individually with a registered mark because of their small size; rather those in possession of Christmas trees will always carry a copy of their permit, and prominently display the permit number on bundles of trees in transport. The Christmas tree permit begins with the letter C followed by five numbers,

- recorded as C12345.

2.1.5.1.11 Watershed Agreements

Watershed agreement marks all begin with WS and a number, followed by the number of the cutting permit attached to the agreement. For example, the agreement number "1" with a cutting permit number 6,

- recorded as WS1006.

2.1.5.1.12 Free Use Permit

Free use permits, though uncommon, are issued for a number of purposes. Administratively, they are like a cash sale, where the Forest Service determines the volume of timber to be harvested prior to the harvest taking place, and the applicant pays for it at the time of making the application. As with Cash Sales, the scaler should check with the local district staff to determine the scale submission requirements,

- recorded as FUP1234.

2.1.5.1.13 Master Licence to Cut

Master Licences to Cut are administered by the Oil and Gas Commission. These are issued when there is a legal right to occupy Crown land but not to harvest the timber. Some of these circumstances are roads for geophysical exploration, development of well sites or pipelines, mines or oil pits. They are consecutively numbered and consist of three letters and three numbers below the letters,

- recorded as ABC123.

> Designates are the Cutting Permit that is attached to a timber mark, usually as the last character of the mark. It is used when the area of the Timber Mark is such that Cutting Permits are needed to designate the area that particular timber is cut from.

2.1.5.1.14 Community Forest Licence

Community Forest Licences all begin with a K, followed by a number, followed by a letter, followed by the 3 alpha/numeric characters of the cutting permit,

- recorded as K2P100.

2.1.5.2 Marks for Privately Owned Land

2.1.5.2.1 Crown Grant – Exportable and Non-Exportable

Some older exportable marks incorporating combinations of number, letters and special characters are still in use. The most common is two letters followed by three numbers. Recently issued exportable marks issued begin with an E followed by four letters. For older marks, the scaler would expect to see such combinations as AA123, A12 (with crescent or bar) and 1A1 (with crescent) and for newer marks, EABCD. Recently issued non-exportable marks begin with an N followed by four letters and appear as NABCD. Older marks would appear with number and letter combinations such as AZ009, A1, A99, 99A (with crescent beneath) and 99AA. An "H", followed with the letter H, M, N, P, Q, S, T or Z and three numbers,

- recorded as HS123 or 99A'.

2.1.5.2.2 Letter of Marking Authority – Exportable and Non-Exportable

This is an historic timber mark and has not been issued since 1996. Letters of marking authority are issued to identify minor quantities of logs removed from private lands alienated prior to March 12, 1906. This mark is a series of six letters; the first letter is "L", indicating that it is a letter of marking authority, and the second letter is "E", indicating that it is exportable. The following four letters refer to a specific authority. Non-exportable letters of marking authority are the same as the exportable marks except the second letter is an [N], indicating that it is non-exportable. The marks would appear on logs as LNA over BCD,

- recorded as LNABCD as LEABCD.

Exportable timber marks are subject to Federal controls, while non-exportable timber marks are subject to provincial controls. Information on the exportability of timber is available at:

Economics and Trades Branch

2.2 Log Brands

2.2.1 Scaled Timber Brands

2.2.1.1 Authority

Part 5 of the *Forest Act* provides that:

- timber that has been scaled and will be transported from its place of scaling must first be conspicuously marked with the scaled timber brand which pertains to that scale site,
- the ministry may exempt scaled timber from this requirement where warranted,
- no person shall remove, obliterate, or alter a brand that has been applied to timber,
- the ministry upon application may issue a certificate describing a scaled timber brand upon application of the scale site operator, and may attach conditions concerning use of the brand, and
- the ministry may cancel a scaled timber brand.

> It is an offence under the *Forest Act* to fail to apply a scaled timber brand as required or to remove, alter or obliterate a brand that has been applied to timber.

2.2.1.2 Purpose

Scaled timber brands are used to indicate:

- that timber has been scaled,
- where the timber was scaled, and
- the forest district where it was scaled.

Timber consumption patterns see thousands of truckloads of timber being transported around the province each year in both scaled and unscaled forms. The scaled timber brand and load documentation as required by the Forest Service helps ensure all timber is scaled and that scaled timber is not scaled twice.

2.2.1.3 Marking Requirements

Unless exempted by the Ministry of Forests and Range, scale sites may not ship scaled timber from a scale site unless they have been issued a scaled timber brand and that brand is applied to the outgoing timber.

Brands are non-transferable and may not be used except with the written consent of the certificate holder.

The responsibility for physical application of the brand falls jointly upon the holder of the certificate and any person using the brand with the consent of the holder (employees, log truck drivers, etc.). The brand *cannot* be applied to any timber that has not been scaled. Application of a brand to unscaled timber may result in charges under the *Criminal Code of Canada*.

Timber branding information is contained in the Timber Marking and Transportation Regulation.

2.2.2 Requirements of Scalers and Timber Weighers

Scaler's may not assume that timber delivered to a scale site has been previously scaled unless it meets the branding requirements and is accompanied with other supporting documentation as may be required such as the Load Description Slip. Where doubt exists as to the scaled status of delivered timber, the scaler or weigh person should place the timber in a secure storage area and contact the local Forest Service office as soon as possible.

2.2.2.1 Format of Scaled Timber Brands

A separate scaled timber brand certificate may be issued for each authorized scale site. The format of the brand is a three character alpha code representing the forest district in which the timber is scaled, and a three or four character alpha-numeric code identifying the scale site where the timber was scaled. Please refer to the map which details Forest Regions and Districts at the website:

Region and District Map

2.2.2.2 Applying for a Scaled Timber Brand (FS 1308)

Applications for Scale Sites and Scaled Timber Brands and Timber Brand Certificates are available on the Public Forms Index.

2.3 Marine Log Brands

2.3.1 Authority

The *Forest Act* provides for issuing marine log brands on receipt of an application. The Forest Service issues a certificate which describes the marine log brand. Marine log brands are registered by the Registrar of Timber Marks and any given marine log brand will not resemble any other registered log brand.

Marine log brands differ from scaled timber brands in several ways:

- they are meant for timber which will be transported in the ocean,
- their use is optional (unless their use is conditional upon an exemption to using a scaled timber brand),
- they do not indicate where they were scaled,
- there are relatively few marine log brands (less than 50 and generally only one per licensee), and
- marine log brands denote ownership.

2.3.2 Purpose

Like scaled timber brands, marine log brands are taken as proof that timber has been scaled.

The main purpose of a brand is to allow the owner to identify and recover timber lost and subsequently salvaged in the coastal waters.

2.3.3 Marking Requirements

> Marine log brands may be applied to timber only after it has been marked with a registered timber mark and scaled. Refer to the Timber Marking and Transportation Regulation for more information.

2.3.4 Requirements of Scalers

Where beachcombed logs are scaled, a marine log brand takes precedence over any other marks or brands on a log. The scaler must record the marine log brand as the timber mark.

2.3.5 Format of Marine Log Brands

Marine log brands are from one to four letters, often stylized as shown, such as A, AB, ABC, or RC:

2.3.6 Applying for a Marine Log Brand

Persons applying for a marine log brand must complete an application in the form required by the Minister. The application must include a prescribed fee as well as a facsimile of the marine log brand applied for.

Upon confirming the proposed marine log brand does not resemble any other registered log brands, the Registrar of Timber Marks may issue a certificate which describes the marine log brand.

2.4 Log Salvage Identification Marks

2.4.1 Authority

The *Forest Act* also provides for establishing log salvage districts. Within the log salvage district a licence may be granted to operate a receiving station. Permits may also be granted to persons wishing to salvage logs.

In a log salvage district, all logs recovered by log salvors (permit holders) must be returned to the log salvage receiving station.

2.4.2 Purpose

Log salvage identification marks are issued to log salvage permit holders. This mark denotes that the log on which it appears was, at one time, in the possession of the permittee (log salvor).

2.4.3 Marking Requirements

Salvors must hammer indent the mark on the ends of logs as soon as they take possession of the log.

2.4.4 Format of Log Salvage Identification Marks

Log salvage marks are always one to four numbers enclosed in a diamond and are read starting from the top going counter clockwise.

= 1234

Species Identification and Defects 3

3.1 Purpose of Classification by Species

The wood of each species has unique properties that affect its value and in many cases, the grade applied to it. Each species' commercial value is tied to its suitability for the manufacture of specific products. As part of the scaling process, a scaler must be able to identify species so that volumes may be calculated by category, for species as well as grade.

The first table (3-1) in this section deals with the major commercial species, their common names and scaling codes. These codes are unique to the function of scaling. The second (3-2) is concerned with identifying some characteristics of the major commercial species.

Table 3-1 Alphabetic Species Listing

Common Name	Scaling Code	Common Name	Scaling Code
Alder (Red, Sitka, Speckled)	**AL**	Larch (Alpine, Tamarack, Western)	**LA**
Arbutus (Pacific madrone)	**AR**	Lodgepole pine	**LO**
Aspen (Trembling)	**AS**	Maple (Bigleaf, Douglas, Vine)	**MA**
Balsam (Alpine Fir, Grand Fir, Noble Fir, Pacific Silver Fir)	**BA**	Ponderosa pine (Yellow pine)	**YE**
Birch (Paper, Water, White)	**BI**	Spruce (Black, Engelmann, Sitka, White)	**SP**
Cedar (Western Red)	**CE**	White pine (Western White)	**WH**
Cottonwood (Black, Balsam Poplar)	**CO**	Whitebark pine (Limber)	**WB**
Cypress (Yellow cedar)	**CY**	Willow (Peachleaf, Black)	**WI**
Douglas-fir (coastal, interior)	**FI**	Yew (Western Pacific)	**UU**
Hemlock (Western, Mountain)	**HE**		

Table 3-2 Unique Characteristics of Major Commercial Species

Common Name	Log Ends and Wood	Knots	Outer Bark	Inner Bark
Alder	Red Alder grows on the coast regions and Mountain Alder in the Interior	Cut limbs are prone to oxidization which can turn to rot which stays in the knots	Thin greenish on young trees turning grey to whitish as it matures. Mountain alder has yellowish brown bark.	Red alder shows *bright red/orange* when first exposed to the air.
Balsam **(includes Grand Fir)**	Wood is creamy white in colour and very close-grained in the Interior with little or no contrast between sap and heartwood. It has a distinctive odour that is exacerbated when wet	Grow in whorls, usually insignificant but good indicator of rot	Silvery gray with *pitch blisters* all over. Greyish white flecks on mature trees. Bark can have longitudinal cracks and flat ridges in older trees.	Soft and mushy and thicker than the outer bark. Look for the *flash of acid green on the underside.*
Birch	Wood is hard and close grained. Stems are cylindrical with a lot of crook and sweep.	Irregular spacing and size.	Thin, white, *peels easily* in Paper and White. Water BI bark curls in older trees.*	Thin reddish/orange which darkens with age.
Cedar **(Western Red)**	Somewhat soft, contrast between white/yellow sapwood and dark heartwood is distinct.It has a pungent odour. Not usually weepy, but the ends can be sticky. Butts often have significant flare	Irregular in spacing and size. Knots are a good indicator of rot. Subject to adventitious knots	Reddish cinnamon brown to greyish brown *Can be stripped off in long strands*.	Yellowish white and fibrous
Cottonwood grows west of the Rockies **Balsam Poplar** grows in the north and east of the Rockies	These two species are almost identical in appearance. *Only the leaves* of the two are different with balsam poplar having a greenish sheen on the underside while cottonwood is silvery on the underside. The wood is soft and light coloured with dark, often stained heartwood	Irregular and very large in older trees.	In young trees it is green/grey and smooth turning dark grey as it ages and forming *flat v-shaped ridges.*	Insignificant, white
Cypress (Yellow Cedar)	Non-resinous with a characteristic odour and yellowish colour*. Little contrast between sapwood and heartwood. Slow growing	Irregular spacing and sized. Knots are often rotten.	Thin and similar to CE but more grey. Hard and shows a grey streak in mature trees. Narrow intersecting ridges.	Soft and stringy but can't be pulled off in strips. Characteristic *potato peel* smell*.
Douglas-Fir	Hard with a distinctive *reddish brown heart*. Definite contrast between sap and heartwood. Subject to butt rot, conk, shake.	Grow in whorls. Subject to bunch knots and adventitious branching	Thick, brown and beige with a corky appearance in mature. Smooth and grey with pitch blisters in young trees.	Reddish brown and somewhat stringy

Common Name	Log Ends and Wood	Knots	Outer Bark	Inner Bark
Hemlock	Wood is considered hard,strong and close-grained. Colour is yellowish white to pale brown with little or no contrast between sap and heartwood. Stems often have a lumpy appearance with a flattened butt flare.	Irregular spacing and size. Does not grow in whorls. Can have small black knots from discarded branches. Knots are good indicators of rot Subject to rotten knots	Scaly on young trees and russet brown with a maroon under colour. Darkens with age into flat-topped ridges. and irregular dark brown scales	Medium thick. distinctive red with purple streaks.
Larch **(Tamarack)**	Strong hard wood. Sharp contrast between sap and heart wood. Heartwood more brown than FI. Pitchy ends. Subject to conk.	Grow in whorls. Subject to bunch and oversized knots which are a good indication of rot	Thick grooved, plate-like in mature trees , cinnamon brown to reddish. Bark is similar to YE* Scales come off in thin narrow strips	Insignificant whtish beige
Lodgepole Pine	Yellowish white heartwood. White sapwood. Heavy and soft. Close grained often spiral. Cut ends pitch evenly. Bole can be quite irregular.	Grow in whorls. Often recessed and small.	Thin fine scales. Blackish to dark brown or blue/grey scales dotted with *small pitch blisters*	Orange brown under scales. Thin bark usually < 1 cm
Spruce	A soft, close-grained, light coloured wood. Little contrast between sap and heartwood. Stems are very cylindrical with a pronounced flare and are subject to grain deflection	Grow in whorls. Brittle when dead	*Engelmann* - Scales are large, loose and circular. Light brown with silvery overtones and reddish pink underneath. *Black*, bark is grey, scaly and similar to LO. *Sitka* –Scales are round, loose and rusty brown.*	Silvery white to beige. Sticky and with a distinctive odour
White Pine	Light and soft. The sapwood oozes when cut and produces a distinct sap ring. Often oxidizing into a bluish tint. E*nds pitch profusely* and can be a significant identifier	Grow in whorls and knots are often a deep purple colour.	Thin, smooth, and darkish grey on young trees with narrow, scaly brown plates developing on the butts of mature trees*.	Brown. Not mushy
Yellow Pine (Ponderosa Pine)	Heavy, pitchy and very strong. Wide sapwood ring and yellowish to brownish heartwood. *Dark pith in the centre of the heart*.	Grow in whorls and subject to large knots on upper stem*.	Deeply fissured into broad, elongated, flat plates. Thick bark up to 10 cm*.	Brown and stringy but insignificant

*some of the descriptive phrasing comes from 'The Tree Book – learning to recognize the trees of British Columbia' written by R. Parish and S. Thomson as described in section 3.1

Many species have bark that is somewhat similar in appearance. Conversely, bark may look markedly different on the same tree. If in doubt, be sure to check all indicators before classifying any log by species (appearance of bark, colour and hardness of wood, sapwood/heartwood contrast, form and shape of logs, and type of needles).

The reference book noted below contains information on tree species including growth area maps, needle and cone descriptions and exceptional pictures. For further information on species identification please refer to:

- The Tree Book – Learning to Recognize Trees of British Columbia. A Canadian Forest Service and Ministry of Forests and Range publication. ISBN 0-7726-2159-4, FS 316 HPA 94/07. By Roberta Parish and Sandra Thomson. Cf.

This book is available online at:

Tree Book – Learning to Recognize Trees of British Columbia

Or it can be ordered from:

Wild BC
PO Box 9354 Stn Prov Govt
Victoria BC V8W 9M1
Phone: 1-800-387-9853 or in Victoria (250)356-7111
Fax: (250)952-6684
Email: wild@gov.bc.ca

Some other books of interest on tree identification are:

- Plants of Coastal British Columbia
  edited by J. Pojar and A. MacKinnon ISBN 1-551-05042-0

- Plants of Northern British Columbia
  edited by A MacKinnon, J. Pojar and R. Coupe ISBN 1-551-05108-7

- Plants of Southern British Columbia
  edited by R Parish, D. Lloyd, and R. Coupe ISBN 1-551-05057-9

These books are available from Lone Pine Publishing at:

Lone Pine Publishing

More books of interest are:

- Native Trees of Canada 8th Edition by R.C.Hosie
  ISBN 0-88902-558-4 published by Fitzhenry & Whiteside

- Trees, Shrubs and Flowers to Know in British Columbia by C.P. Lyon
  ISBN 0-460-95301-X published by J.M. Dent & Sons (Canada) Ltd.

These books are available at bookstores throughout B.C.

3.2 Common Tree Defects

If all logs were smooth, round, and sound scaling would be simple. Because they are not it is necessary for the scaler to find the amount of volume lost from various defects. In general, the defects in logs will fall into three major classifications: defects due to rot fungi, defects due to other natural causes, and defects due to handling.

3.2.1 Disease

Some of the major tree diseases considered in scaling and grading (but not limited to):

- Root diseases (butt rot)
- Heart rots (including Conk, Indian Paint Fungus, Pin Rot)
- Canker diseases (bark diseases resulting in scarring)
- Sap rots (surface rot)
- Abiotic diseases (frost injury. scar)

The primary reference used for tree diseases is:

Common Tree Diseases of British Columbia by E.A. Allen, D.J. Morrison, G.W Wallis ISBN0-662-24870-8 published by Natural Resources Canada and the Canadian Forest Service. 1996

The Link to the Canadian Forest Service web page on tree diseases is:

Tree Diseases

Or order a copy from their bookstore at:

Canadian Forest Service Bookstore

Other useful references include:

Field Guide to Forest Damage in BC

The Tree Doctor

Forest Pathology

3.2.2 Other Natural Defects

Surface defects take a variety of forms, showing up as either rot, charred wood, or missing wood such as catface, deadside, and miscellaneous scars. With experience, it will become clear that many forms of these defects will suit a shape for which a

calculation method is described in both the *Gross Measurements Procedures* and in the *Defects and Conventions Chapters* of this manual.

3.2.3 Mechanical Defects

Regardless of how efficiently or carefully the logging process is conducted, it will result in some damage to timber when they are felled, bucked, transported, and handled by various mechanical devices. In many instances, this damage may result in a considerable loss of firm wood and the scaler must be able to recognize and make proper allowances for the various types of mechanical defects. Log storage over long periods can cause defects. An example of this is sap rot in dryland decks and toredo borings in log booms on the water.

It is important to perform a scale as soon as possible after harvesting to avoid the problems of determining whether defects are natural or induced by storage. Normally, damage to timber after delivery to the scale site is not accounted for. It is necessary for the scaler to contact the Forest Service scaling representative for instruction on the correct approach to take in each situation.

This page is intentionally left blank.

Smalian's Formula 4

4.1 Smalian's Formula

From the inception of cubic scaling the Smalian formula, which calculates logs on the basis of a parabolic frustum, was adopted as the cubic scale rule. This scale requires measurement of the two inside bark diameters and the length.

$$V = \frac{A_1 + A_2}{2} \times L$$

where: V is the volume of the log in m^3.

A_1 is the area of the small end of the log in m^2.

A_2 is the area of the large end of the log in m^2.

L is the length of the log in m.

Figure 4.1 The Smalian Formula.

Smalian's formula states that the volume of a log can be closely estimated by multiplying the average of the areas of the two log ends by the log's length. The units used for the areas and the length must be the same, (e.g., square metres and metres in British Columbia), in order to arrive at the volume in cubic metres.

4.1.1 Smalian's Formula in Detail

Smalian's formula uses the formula for the area of a circle to find A_1 (area of the top end in m^2) and A_2 (area of the butt end in m^2):

$$A_1 = \frac{\pi T^2}{10000}, \text{ and}$$

$$A_2 = \frac{\pi B^2}{10000}$$

Fully expressed, Smalian's formula becomes:

$$V = \frac{\frac{\pi T^2}{10000} + \frac{\pi B^2}{10000}}{2} L$$

where:

V	=	volume of the log in cubic metres,
π	=	3.141 592 (to 7 significant figures or 6 decimal places),
T	=	radius of the small end in centimetres (or the diameter in rads as illustrated in Figure 4.5),
B	=	radius of the large end in centimetres (or the diameter in rads as illustrated in Figure 4.5), and
L	=	length of the log in metres as shown in Figure 4.5.

(Division of the top and butt areas by 10 000 converts square centimetres to square metres. Division of the sum of the top and butt areas by 2 determines the average end area.)

4.2 Log Forms and the Formula

A tree tapers from the base to the tip but the rate of taper is not uniform throughout all parts of the stem. Logs approach the form of truncated cones, neiloids, paraboloids, and occasionally, cylinders. These truncated sections, illustrated in Figure 4.2, are referred to as frustums of the geometric figure they resemble. The scaler can identify the log shapes by noting the position of the average of the diameter at both ends. If the average diameter occurs exactly equidistant from both ends the log form is conoid. If the average diameter is found in the butt half, the form is neiloid, and if in the upper half, the form is parabolic.

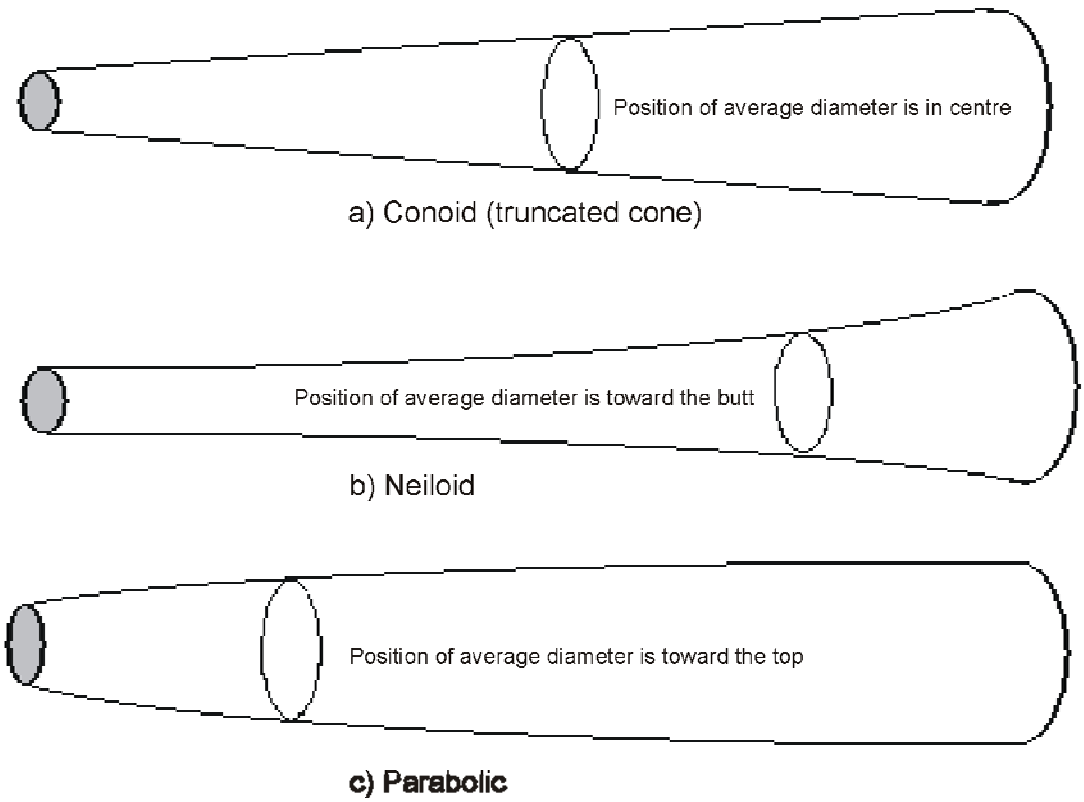

Figure 4.2 Depictions of Three Typical Log Forms.

Smalian's formula arrives at average area by averaging the areas of the top and butt ends of a log. The Smalian formula is the official log scaling rule for the Province of British Columbia because it is practical and works well where logs are bucked prior to scaling.

The effect of bucking is to reduce taper, and experience has shown that where the difference between the top and butt diameters exceeds 30 percent, (where the butt diametre exceeds 150 percent of the top diameter) the use of Smalian's formula is not an accurate reflection of log volume. This is demonstrated in Figure 4.3, where a one cubic metre cylinder is gradually reduced in diameter at one end, becoming a cone, which has a volume of 0.333 m^3. Calculated with Smalian's formula, the volume is overstated as

0.500 m^3, and if calculated by averaging the diameters, the volume is understated as 0.250 m^3.

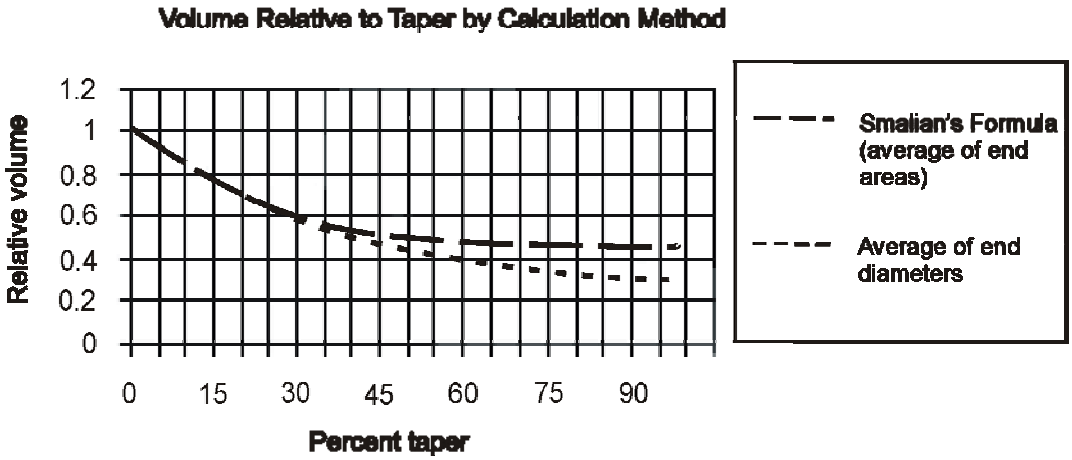

Figure 4.3 Graph of the Effects of Taper on Log Volume.

Normally, the difference between the top and butt diametres of typical logs is less than 30 percent, and Smalian's formula is an accurate reflection of the true log volume. However, the greater the difference in diametre between the log ends, the less reliable will be the volumes obtained using Smalian's formula. Where excessive taper exists, the Forest Service may order that logs be bucked prior to scaling to improve accuracy.

Figure 4.4 illustrates how Smalian's formula may be visualized as either one cylinder projecting the average of the basal areas of the large and small ends for the full log length, or as two cylinders; one projecting the area of the small end for exactly one half the log length and the other projecting the area of the large end for exactly one half the log length. Either view will produce the same results; a volume equivalent of the log represented.

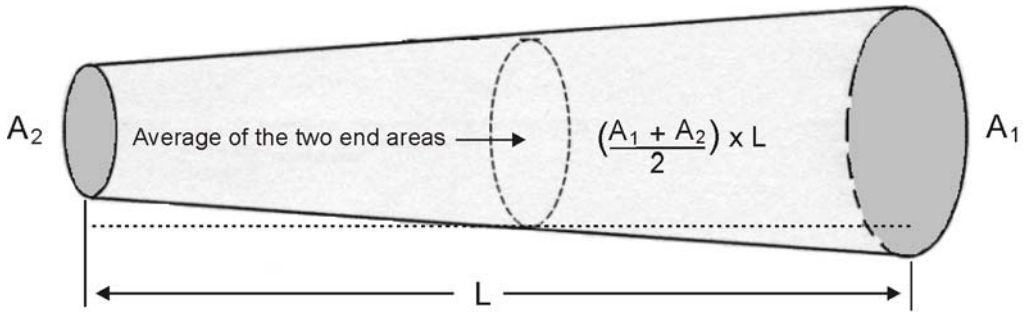

Here, the dashed outline represents a cylinder with a cross-sectional area equal to the average of the top and butt areas.

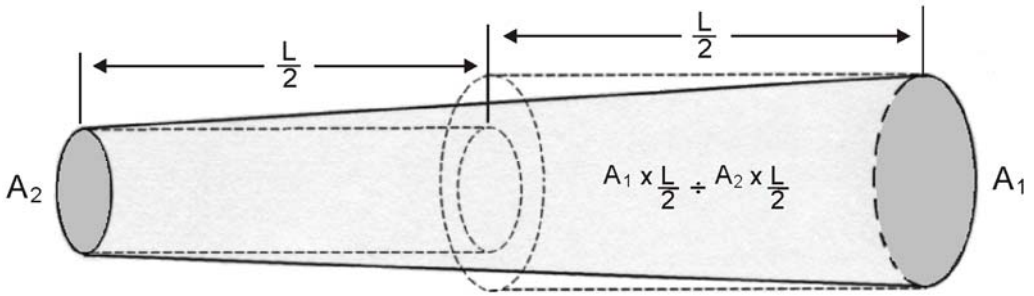

In this example, the solid represented by the dashed outline shows two cylinders - one with an eand area equal to the top end area, the other equal to the butt end area; both running exactly half the log length. This is how the scale stick calculates Smalian volumes (using half-volume tables).

Figure 4.4 Two Ways to Visualize Smalian's Formula.

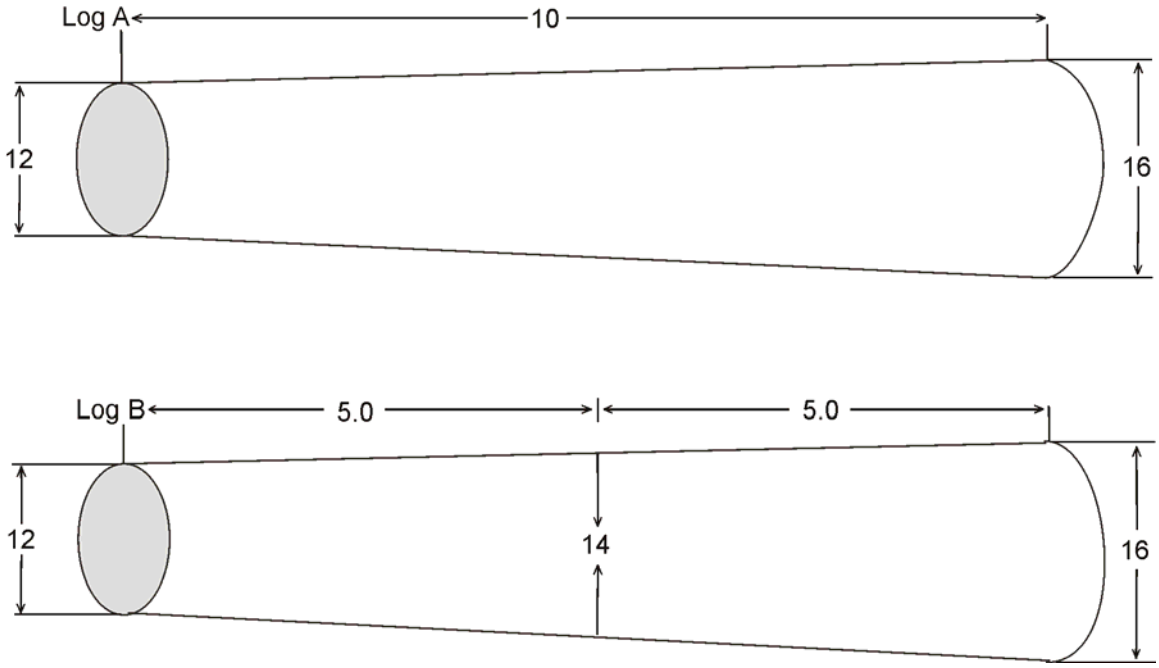

Figure 4.5 Measurements for Finding the Values "T", "B" and "L" in Smalian's Formula.

If a log is measured across its diametre in rads using a scale stick, the recorded measurement will also represent the radius of the log in centimetres.

4.2.1 Smalian's Formula - Example Calculation

If the log illustrated in Figure 4.5 is given a top radius "T " of 9 cm (9 rads in diametre), a butt radius "B" of 11 cm (11 rads in diametre), and a length "L" of 9 m.

Fully expressed, Smalian's formula states:

$$V = \frac{\frac{\pi T^2}{10000} + \frac{\pi B^2}{10000}}{2} L$$

Substitute the variables "T", "B" and "L" with the logs dimensions:

$$V = \frac{\frac{\pi 9^2}{10000} + \frac{\pi 11^2}{10000}}{2} 9.0$$

Calculate the area of the two ends in square centimetres:

$$V = \left(\frac{\frac{254.468\ 952}{10\ 000} + \frac{380.132\ 632}{10\ 000}}{2} \right) 9.0$$

Divide each area by 10 000 to change square centimetres to square metres:

$$V = \frac{0.025446895 2 + 0.038013263 2}{2} 9.0$$

Sum the areas of the two ends and divide by two to average the areas:

$$V = 0.031\ 730\ 079\ 2 \times 9.0$$

Multiply the average end area by the length in metres to yield the volume:

$$V = 0.285\ 570\ 712\ 8\ m^3,$$

Round the volume of the log to 3 decimal places:

$$\text{Volume} = 0.286\ m^3$$

4.2.2 Smalian's Formula - Simplified

The fully expressed Smalian's formula described in Section 4.2. contains three constants; "π", 10 000, and "2". For field use, the formula may be simplified by reducing these constants to one constant, expressed as "C ". Smalian's formula is:

$$V = \frac{\frac{\pi (T^2 + B^2)}{10000}}{2} = L$$

By rearranging the terms to consolidate the constants, the formula becomes:

$$V = \left(T^2 + B^2\right)\frac{\frac{\pi}{10000}}{2} L = 0.0001570796$$

The value of "*C*" is therefore:

$$C = \frac{\frac{\pi}{10000}}{2} = \frac{\frac{3.141592}{10000}}{2}$$

$$C = 0.000\ 157\ 079\ 6$$

Using the constant "*C*" provides for Smalian's simplified formula:

$$V = \left(T^2 + B^2\right) x L x C$$

where: *V* = the volume of the log in cubic metres,

T = the top radius in centimetres (or the diameter in rads),

B = the butt radius in centimetres (or the diameter in rads),

L = the length in metres, and

C = 0.000 157 079 6 (the constant).

4.2.3 Smalian's Simple Formula - Example Calculation

Using the simplified Smalian's field formula developed in Section 4.2.2 and substituting the log dimensions from Figure 4.5 into the formula, the volume of the log may be calculated in fewer steps than with the long formula demonstrated in Section 4.2.1. Many pocket calculators will not carry this number of decimals, so one may use 1.570 796 and divide by 10000 after multiplication.

$$V = \left(T^2 + B^2\right) x L x C$$

$$V = \left(09^2 + 11^2\right) x 9.0 x 0.0001570796$$

$$V = (81+121) x 9.0 x 0.0001570796$$

$$V = 202 x 9.0 x 0.0001570796$$

$$V = 1818 x 0.0001570796$$

$$V = 0.28557071$$

Round the volume of the log to 3 decimal places:

$$\text{Volume} = 0.286\ m^3$$

4.2.4 The Application of Smalian's Formula

Most scalers derive log volumes from computer software, from the BC Metric Scale Stick, or from the FS 546 Table of the Half Volume of Cylinders in Cubic Decimetres. All of these methods, while still based upon Smalian's formula, save unnecessary arithmetic but scalers must know and be able to use the formula in situations where these tools are not available.

Scalers must be able to demonstrate their knowledge and comprehension of the principles underlying scaling by stating the full version of Smalian's formula and by calculating volumes with either the full or simplified version on the written portion of the Licenced Scaler's Exam.

All persons designing software for scaling purposes must employ Smalian's formula and have the software approved by the Ministry of Forests and Range. Information on approval procedures can be obtained from a regional office of the Forest Service or at:

MOFR Public Website

4.3 Other Formulae

Roundwood and defect formulae all use Smalian's formula to determine volume in cubic metres. Other formulae allow scalers to determine volumes on shapes other than round. These scaling formulae include the quadrilateral (4 sided), triangular (3 sided), sector and 'parent log'. Some of these formulae are used in defect measurement and for out-of-round slab shapes.

They are all thoroughly explained in the *Gross Measurement Procedures* chapter of this manual.

This page is intentionally left blank.

Scaling Tools 5

5.1 Scaling Tools

> All scaling computation software and measuring devices must comply with Ministry of Forests and Range and/or CSA standards for accuracy (CSA CAN3-0302.1-M86-12.x). It is the responsibility of scalers to ensure the accuracy of their equipment.

5.1.1 BC Metric Scaling Stick

The BC Metric Scaling Stick is the principle piece of scaling equipment used in log scaling in BC. Diameters, lengths and volume calculations can all be determined using only this piece of equipment.

5.1.2 Tally sheets

Tally sheets are used to record scale data. The data is then key-punched into computers which use Smalian's formula to calculate volumes. These forms, the FS 1210, 1211 and 1212, and Volume Estimates can be found on the MOFR Forms Website.

5.1.3 Hand-held Computers

Hand-held computers and data capture units, using ministry approved scaling software are now preferred over the tally sheet system. After entering the data, the computer generates a detailed log listing including volumes by species and grades which must be retained for check scaling purposes. Paper forms may be used in some circumstances, but most scale is now submitted electronically. Please see the link for instructions regarding electronic submission to HBS: HBS Industry Manual.

5.1.4 Volume Tables

The FS 546 *Table of the Half Volume of Cylinders in Cubic Decimetres* contains half volumes of cylinders with lengths from 2 m to 29.9 m and radii from 1 cm to 100 cm. It is sometimes used to assist in hand compiling log volumes.

5.1.5 Measuring Tapes

The metric steel loggers' tape, calibrated to 0.01 m (0.1 dm) increments, is used to measure log lengths. Tapes are available in 10.0, 15.0, 20.0, and 25.0 m lengths. Tapes should be compared to a scale stick or other known length to ensure accuracy.

5.1.6 Limits of Error

Limits of Error and Tolerances for all Local Standards of Length are as per the Regulation of the Weights and Measures Act at: Weights and Measures Regulations.

5.2 The BC Metric Scale Stick

The BC Metric Scale stick is the fundamental scaling tool. It is used to measure log diameters and lengths; and to calculate volumes and defect deductions. The stick is manufactured in three lengths; 1 m, 1.5 m, and 2 m. The handles of the 1 m and the 1.5 m sticks are in addition to the stick length, whereas the handle is included in the length of the 2 m stick. Scale sticks are also manufactured in left or right handed styles, in a version which is somewhat slimmer than standard sticks, and with a "spud" attached, similar to the American Scribner stick. This spud is used to break out wedges of wood from log ends and knots so they may be examined for rot.

Equipped only with a metric scale stick, an approved tally sheet and a pencil, the licensed scaler can perform the official scale. The stick will allow the scaler to measure log diameters and lengths, slab widths and thicknesses, defect dimensions, knot sizes and twist and to calculate the gross log volume, the defect volume and the net volume and/or net dimensions and grade. It is the principle piece of scaling equipment.

5.2.1 Application of the Scale Stick to Measure Diameters

Smalian's Formula requires a log's top and butt radii and length to calculate a volume. The scale stick is graduated in 2 cm increments called "radius class units" or rads. This design allows the scaler to measure and express a log's diameters in rads and as well as expressing the radii in centimetres. Therefore, in measuring a round object:

> A diameter in rads is equal to the radius in centimetres.

5.2.2 Application of the Scale Stick to Measure Widths and Thicknesses

The scale stick is designed primarily for measuring diameters and calculating the volumes of round logs by giving the radius in centimetres. Widths and thickness of three and four sided slabs are also measured in rads but the mathematical correlation is different because radii are not involved. For example, a slab measuring 10 rads by 10 rads represents a width and thickness of 20 cm by 20 cm, not a radius of 10 cm. To avoid conversion of rads to centimetres for finding volumes, factors are applied, and the slab measurement section (Chapter 6) describes the application and use of these factors.

5.2.3 The Application of the Scale Stick to Measure Lengths

The scale stick may also be used for measuring length. Starting from the tine of the stick, lengths are graduated in 0.1 m (1 dm) increments. Odd decimetres are marked with a red line at the exact increment and even decimetres are indicated by red numbers which are offset from the exact increment.

5.2.4 The Application of the Scale Stick for Unit Volumes

Reference to unit volumes and average unit volumes are made throughout this manual. A unit volume is the volume of a 1 m length of one end of a log in cubic decimetres per metre, and an average unit volume is the average of the unit volumes of both ends of a log. They are directly proportional to end areas of a log; the end area in square decimetres is always 1/10 of the unit volume. Unit volumes are provided on the scale stick to calculate gross volumes, defect volumes, and net volumes.

5.2.5 The Application of the Scale Stick for Half Volumes

References to half volumes are made throughout this chapter. They are simply the expression of the volume, in cubic decimetres, of a log or slab of any given length for one-half of its length. Half volumes are provided on the scale stick to allow the calculation of a volume by simply adding the half volumes from each end of a log, rather than calculating a full volume for each end and dividing by two.

Figures 5.1 through 5.8 on the following pages illustrate the parts and use of the scale stick.

The approved BC Metric Scale stick specifications are documented at the end of this chapter.

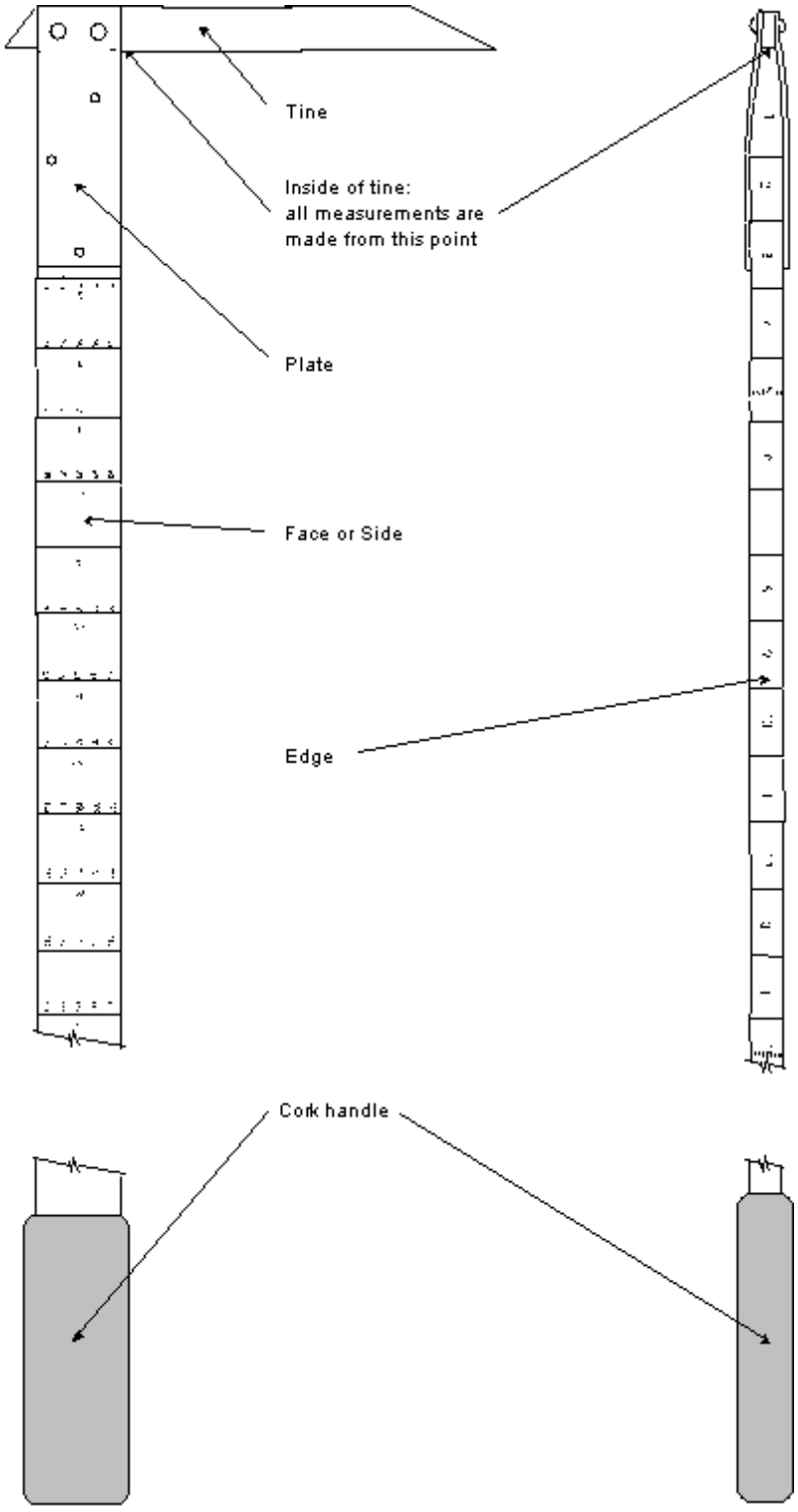

Figure 5.1 Basic Parts of the Official BC Metric Scale Stick.

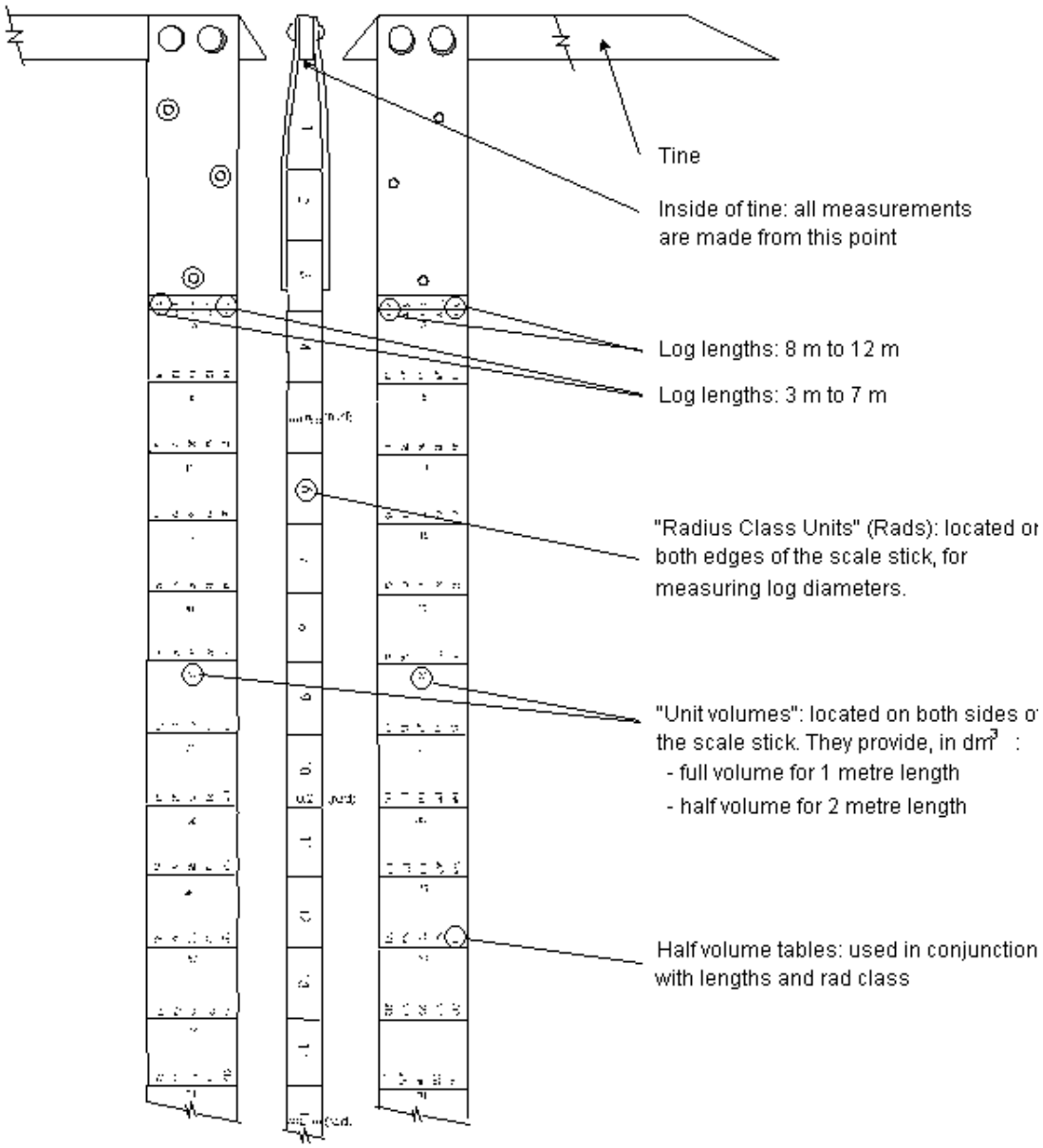

Figure 5.2 Sides and Edge of a BC Metric Scale Stick.

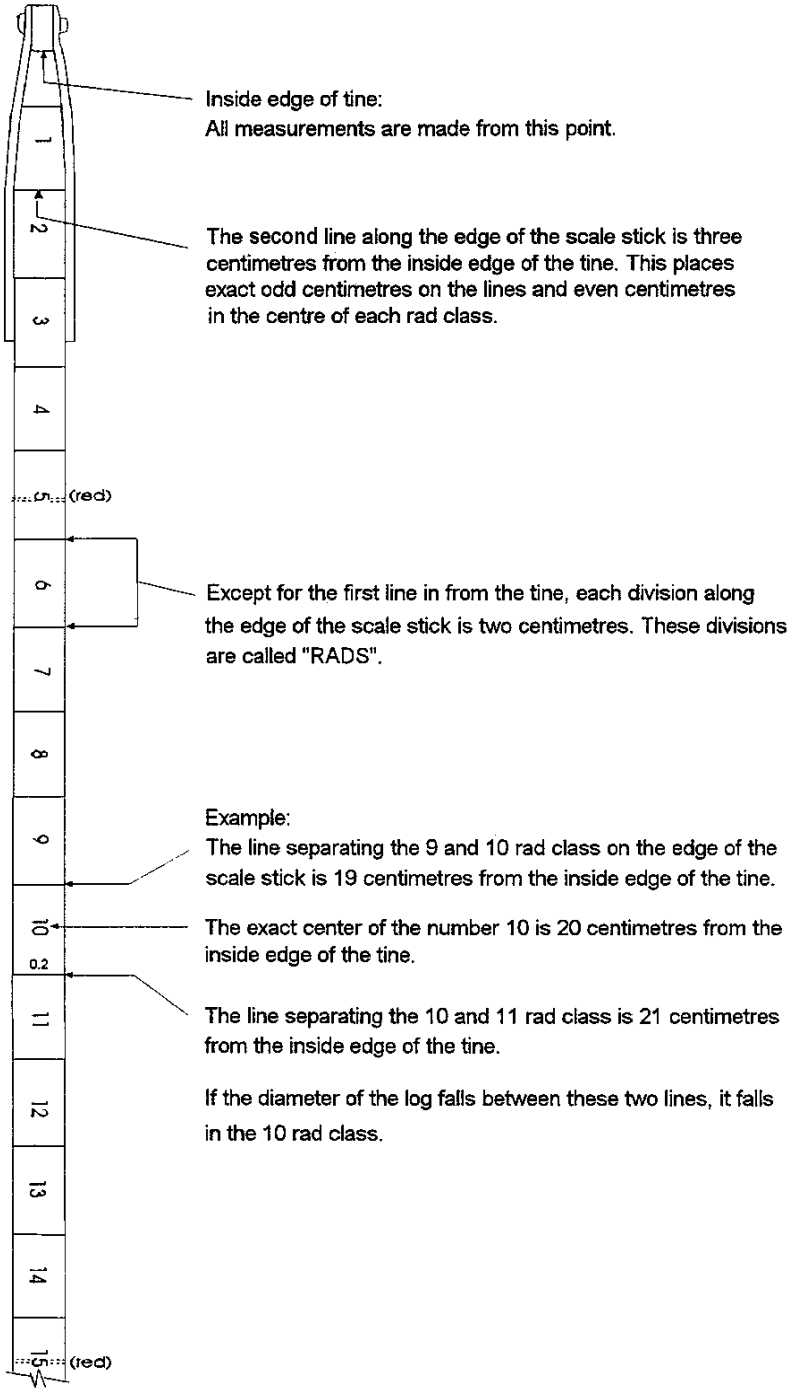

Figure 5.3 Locating Centimetres from the Edge of a BC Metric Scale Stick.

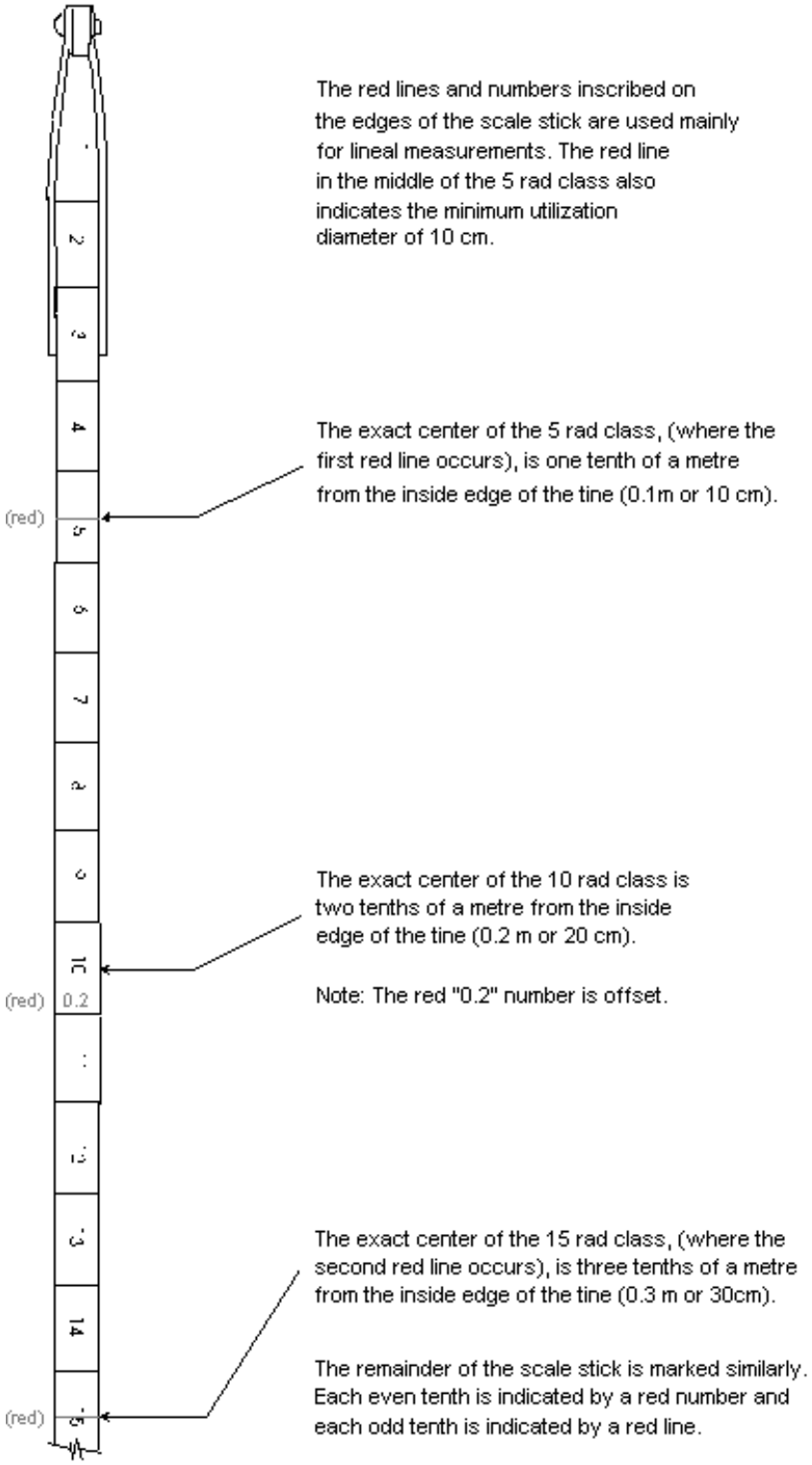

Figure 5.4 Scale Stick Edges Showing the Red Markings for Length Measurements.

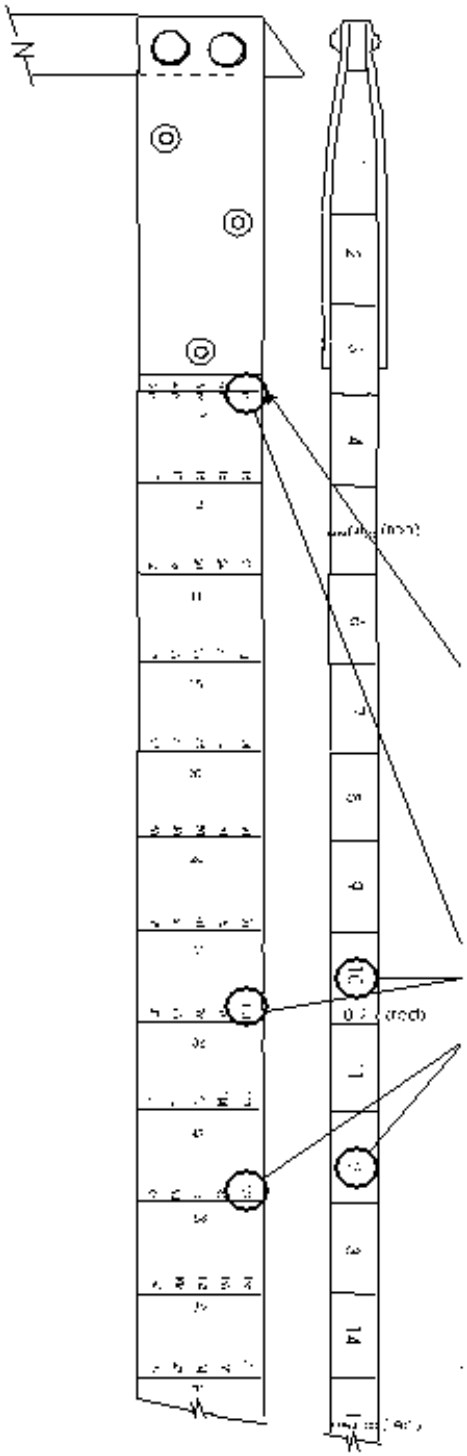

Log volumes on scale sticks and volume tables are printed in half volumes of cylinders in cubic decimetres.
- Half volumes are printed so that division by two is not necessary.
- Cubic decimetres are used to eliminate the printing of "decimal points". (1 dm^3 = 0.001 m^3)

The numbers running parallel to the length of the scale stick represent the half volume table in cubic decimetres for a cylinder of a measured "rad class", and a log length.

The log lengths for each row of half volumes are located in the "3 Rad" class, just above the tine.

Example:

A log -
7.0 metres in length with a small end diameter of 10 rads will have a half volume of 110 dm^3
and a large end diameter of
12 rads will have a half volume of 158 dm^3

The total log volume is 110 + 158 = 268 dm^3
or 0.268 m^3

Figure 5.5 Using the BC Metric Scale Stick to Calculate Half Volumes.

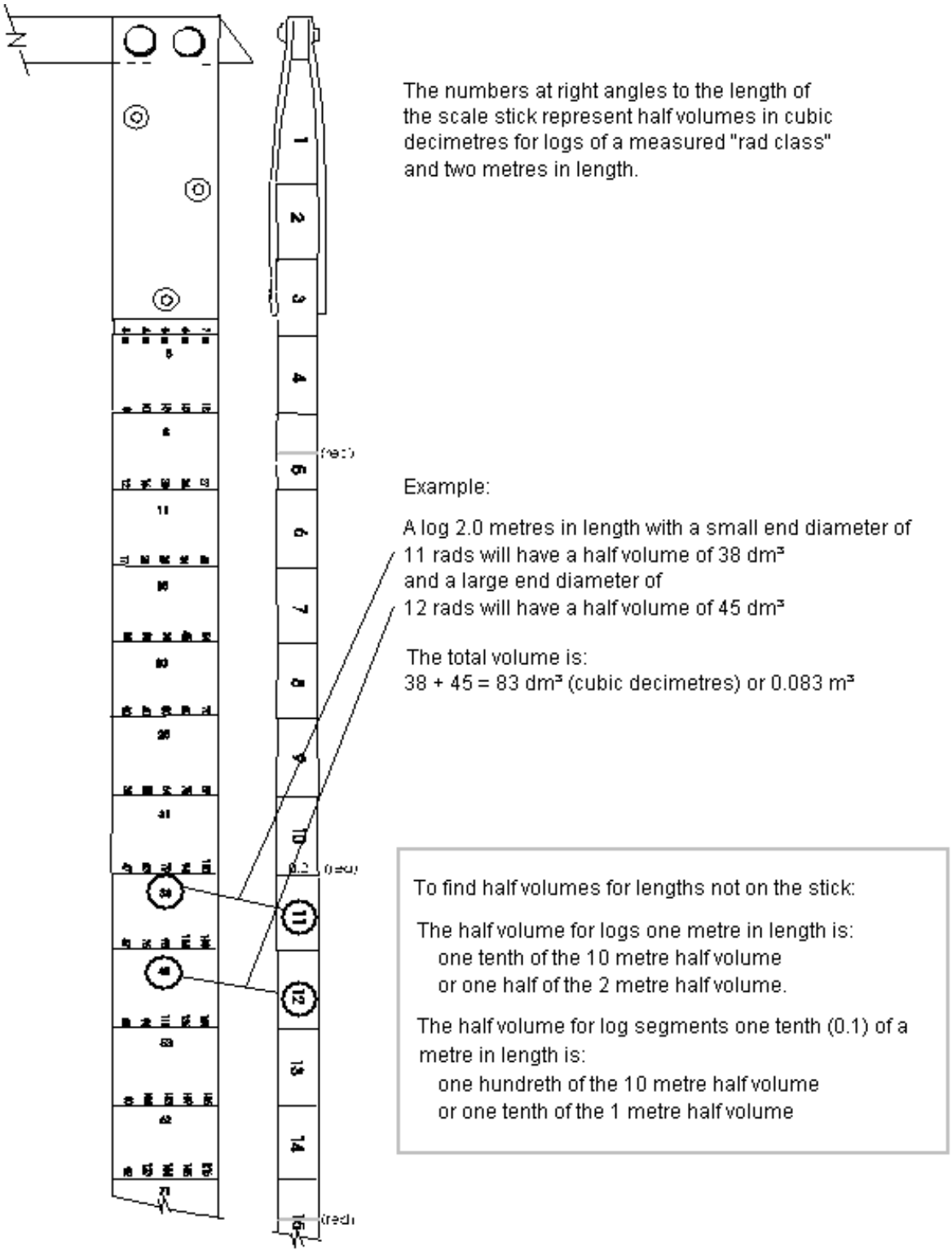

Figure 5.6 Use of the Side and Edge of the Stick in Calculating 2 m Half Volumes.

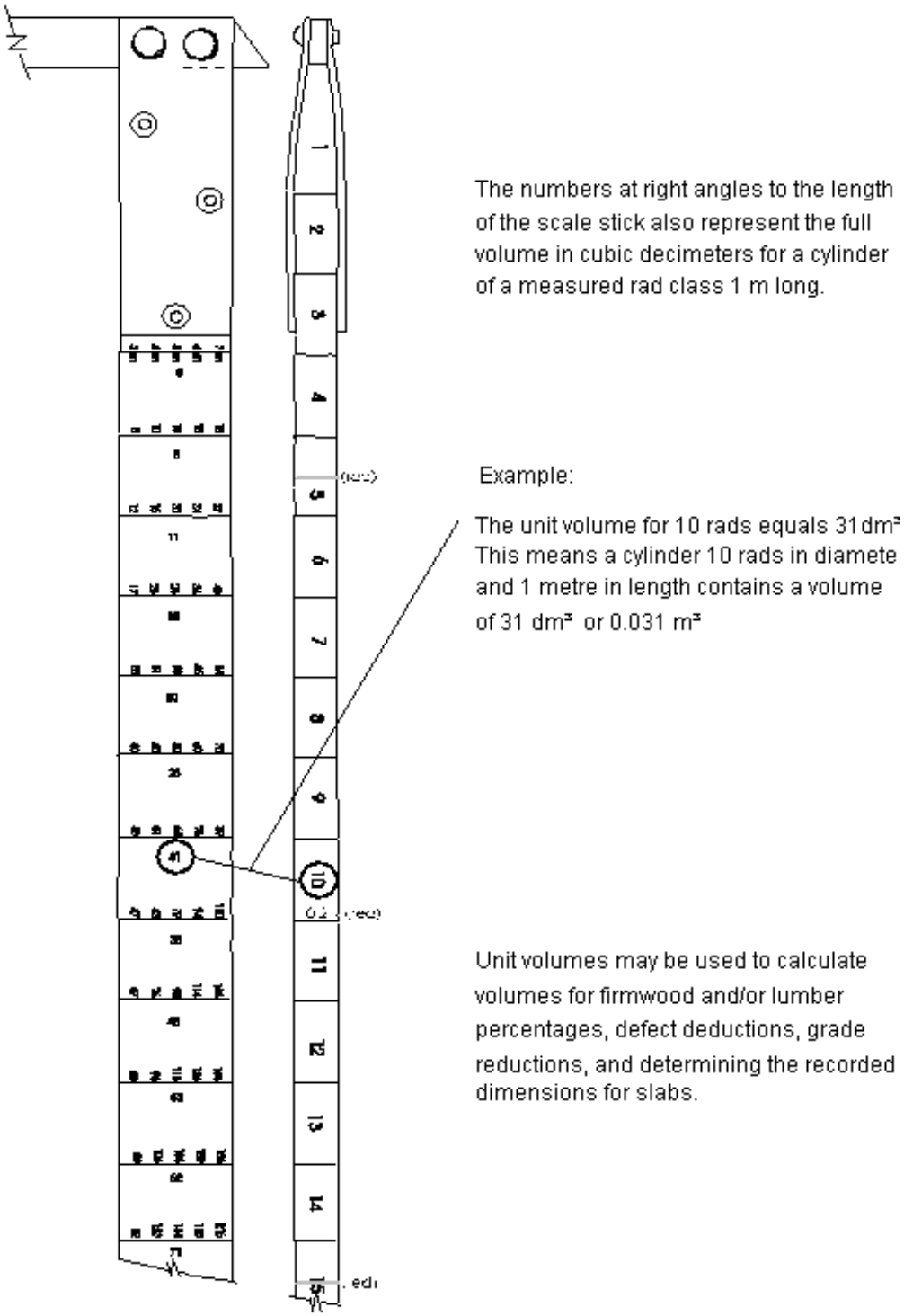

Figure 5.7 Obtaining Unit Volumes (or "factors" from the Scale Stick.

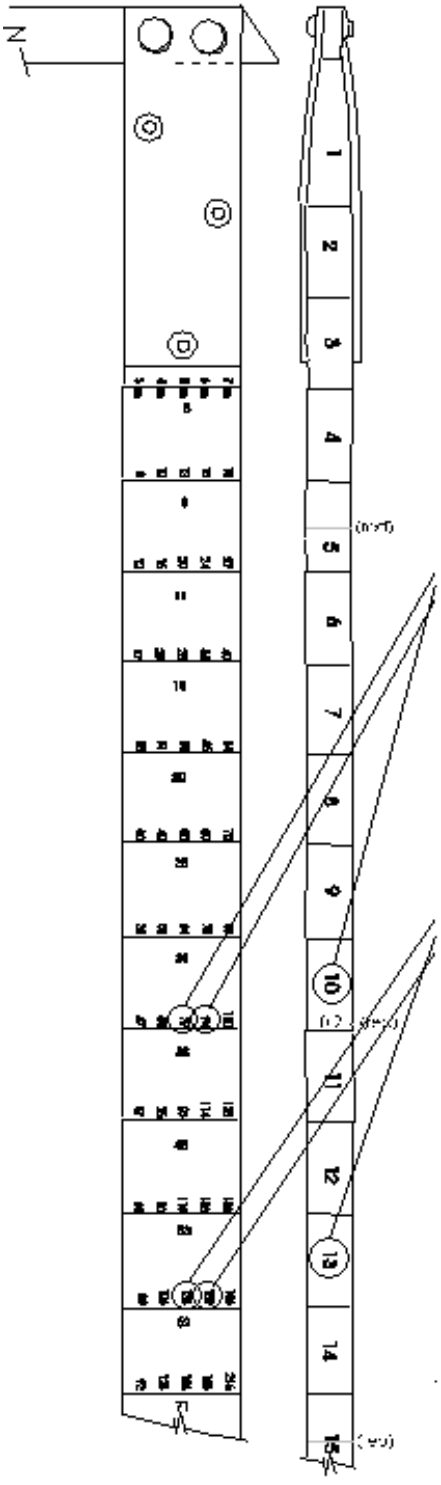

Half volumes are calculated for log lengths in metres and tenths of metres.

Example:

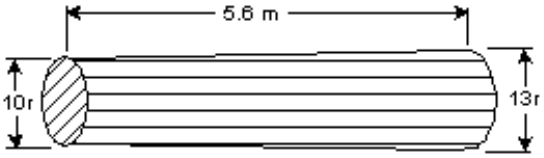

Small diameter:
The 10 rad half volume for 5.0 m is 79 dm³
The 10 rad half volume for 0.6 m is 9.4 dm³
(one tenth of the 10 rad half volume at 6.0 m is 9.4 dm³)

79 + 9.4 = 88.4 dm³ half volume for the small end of the log.

Large diameter:
The 13 rad half volume for 5.0 m is 133 dm³
The 13 rad half volume for 0.6 m is 15.9 dm³
(one tenth of the 13 rad half volume at 6.0 m is 15.9 dm³)

133 + 15.9 = 148.9 dm³ half volume for the large end of the log.

Total Volume:

88.4
+148.9
237.3 dm³ or 0.237 m³

Figure 5.8 Using the Side and Edge of the Stick for Lengths in Tenths of Metres.

Table 5-1 Volumes of One Metre Cylinders in Cubic Decimetres

Radius Class	Unit Volume	Radius Class	Unit Volume	Radius Class	Unit Volume	Radius Class	Unit Volume
4	5	26	212	48	724	70	1539
5	8	27	229	49	754	71	1584
6	11	28	246	50	785	72	1629
7	15	29	264	51	817	73	1674
8	20	30	283	52	849	74	1720
9	25	31	302	53	882	75	1767
10	31	32	322	54	916	76	1815
11	38	33	342	55	950	77	1863
12	45	34	363	56	985	78	1911
13	53	35	385	57	1021	79	1961
14	62	36	407	58	1057	80	2011
15	71	37	430	59	1094	81	2061
16	80	38	454	60	1131	82	2112
17	91	39	478	61	1169	83	2164
18	102	40	503	62	1208	84	2217
19	113	41	528	63	1247	85	2270
20	126	42	554	64	1287	86	2324
21	139	43	581	65	1327	87	2378
22	152	44	608	66	1368	88	2433
23	166	45	636	67	1410	89	2488
24	181	46	665	68	1453	90	2545
25	196	47	694	69	1496	91	2602

5.3 Log Scale Stick Specifications as Approved for Official Scaling in British Columbia

a) Scale sticks shall be of one design but manufactured in three lengths. These lengths will be:

b) Coast Stick: 2 m from the inside of the tine up to and including the handle.

c) Interior 1.5 m Stick: 1.51 m from the inside of the tine up to but excluding the handle.

d) Interior 1 m Stick: 1.01 m from the inside of the tine up to but excluding the handle.

e) The stick must be of straight-grained hickory, hard maple or other approved wood of equivalent texture and strength and finished in good quality clear varnish or approved coating or, alternatively, of straight-grained spruce or yellow cedar covered with fibreglass. The finish shall be of such quality and so applied that it does not fracture, craze or become opaque under normal conditions of use. The type of wood and finish will be specified on the purchase order.

f) The stick is to be 23 mm in width; it must, if fibreglass, be built up an additional 2 mm on each edge with fibreglass. It is to be not over 10 mm in thickness.

g) The total weight of the stick, including tine and handle, is not to be over 540 g.

h) The handle of the stick is to be of hard cork or similar material 15 cm long and is to be so fashioned that it provides a comfortable grip.

i) The tine is to be of stainless steel 13 mm wide; 215 mm in length for coast sticks, 130 mm in length for interior sticks; with face plates of a minimum length of 63 mm, outside measurements and a width of that of the stick extending up the broad faces of the stick. Tine and plate must be riveted with steel rivets, not less than four (4) in number, two (2) of which attach the tine to the plate so that the tine is at true right angles to the stick.

j) All required numbering and lettering must be in waterproof ink or paint, red or black as specified, so that the required items are readily legible and will not be obliterated as a result of normal use. Alternative methods of lettering are acceptable, so long as they provide a durability and legibility equivalent to the aforesaid.

k) Numerals representing diameter radius classes, to be shown on both edges of the stick, must be approximately 8 mm high, black in colour, and in bolder face than the other numerals on the stick and must be burned, or otherwise impressed into the wood. Where the stick is fibre glassed, the burning is optional.

l) Black lines marking the limits of the diameter radius classes shall be in bold face and burned into the wood. Where the stick is fibre glassed, the burning is optional. Such lines shall be at 2 cm intervals along the stick at 3 cm, 5 cm, 7 cm, etc. from the inside of the tine with the uppermost line at the handle. Maximum permissible deviations from true measurements indicated shall be 0.8 mm for these markings.

m) Numerals representing lengths, to be shown on both edges of the stick, must be approximately 5 mm high, red in colour, at right angles to the numerals representing diameters and readable from the handle. The red numerals will be 0.2, 0.4, 0.6, 0.8, 1.0 and for longer sticks 1.2, 1.4, 1.6, 1.8 and will be located in the diameter radius classes of 10, 20, 30, 40, 50, 60, 70, 80, and 90.

n) Red lines marking the limits of the length classes, shall be in bold face and burned, or otherwise impressed, into the wood. Where the stick is fibre glassed, the burning or impressment is optional. These red lines will be at 0.1 m, 0.3 m, 0.5 m, 0.7 m, 0.9 m, and for longer sticks 1.1 m, 1.3 m, 1.5 m and 1.7 m respectively, from the inside of the tine. Maximum permissible deviations from true measurements indicated shall be 0.8 mm for these markings.

o) Numerals representing half volumes of cylinders in cubic decimetres, to be shown on the sides of the stick, must be black in colour and approximately 3 mm high. Half volumes of cylinders for the range of diameter radius classes and lengths used on the stick will be taken from Table 1, Half Volumes of Cylinders in Cubic Decimetres.

p) The half volume numerals for each diameter radius class will be separated by black lines corresponding to the diameter radius class lines described above. Maximum permissible deviations from true measurements indicated shall be 1 mm for these markings.

q) Characters identifying the lengths of cylinders for which half volumes are to be shown on the side in the diameter radius class next to the handle and next to the plate, must be black in colour and approximately 3 mm high. The cylinder lengths shown shall be 3 m, 4 m, 5 m, 6 m, or 7 m on the face with the tine pointing down, and 8 m, 9 m, 10 m, 11 m, or 12 m on the other face, with the tine pointing up.

r) Numerals, representing unit volumes in dm3 for each diameter radius class must be black in colour and approximately 3 mm high. These numerals shall be recorded on each face at right angles to the half volume numerals described in (1) above and shall be readable from the handle. Unit volumes for the sides of the stick will be taken from F.S. 546 – Table of the Half Volume of Cylinders in Cubic Decimetres.

s) The following shall be lettered, in black letters approximately 3 mm high, on both sides of the stick in the diameter radius class next to the handle.

Unit Vol. dm3	Half
	Vol.
	dm^3

5.3.1 Parts of a Scale Stick

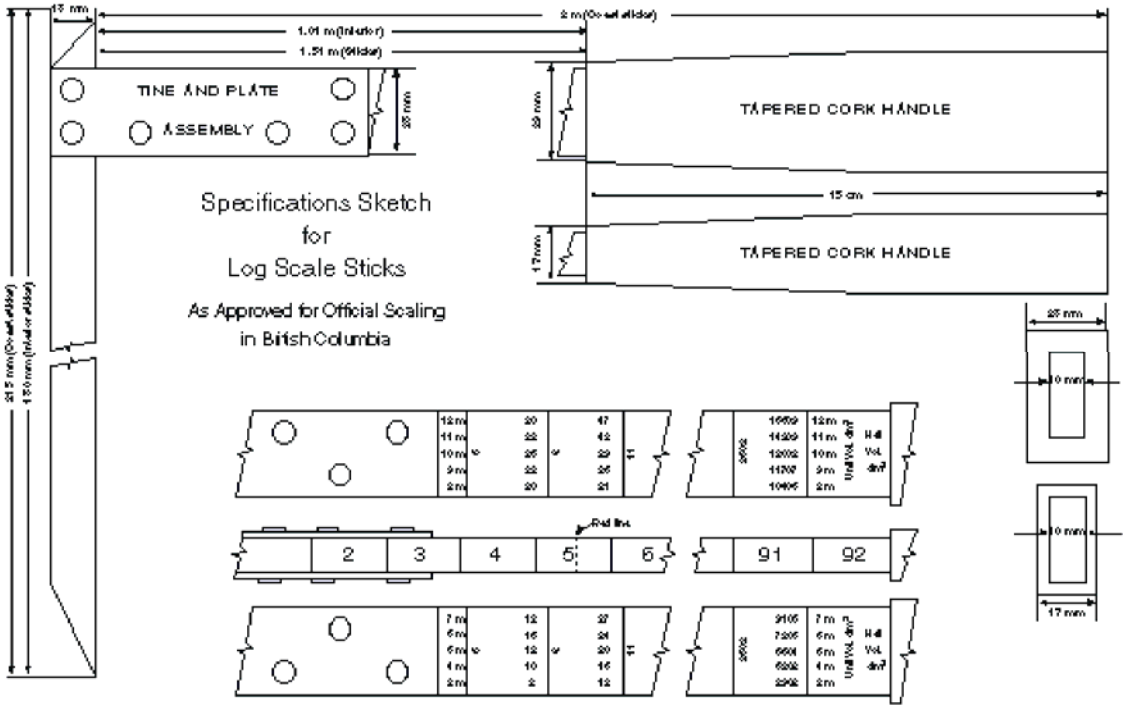

Figure 5.9 BC Metric Log Scale Stick – Specifications Sketch.

Gross Measurement Procedures 6

Scaling plays a critical role in fulfilling the financial responsibility of the Crown to its forest resources in a systematic and equitable manner. Scaling must also serve the needs of the constituents, including timber manufacturing industry and the public in assessing the provincial harvest. To ensure scale results mean the same thing to all users, all scaling must conform to standard measurement methods and conventions.

Scale results in British Columbia are reported in terms of the net firmwood volume in cubic metres. A cubic metre (m^3) of timber can be viewed as a cubic metre of solid wood, free of any rot, hole, char or missing wood; hence the expression "net firmwood volume".

6.1 Measurements

6.1.1 Units of Measure

The legal units of measurement for scaling in British Columbia have been based upon the International System of Units (SI) since the late 1970s. The SI system is commonly referred to as the Metric System.

The units of measure used fall into two general categories:

1. Base units are those measurements actually taken such as length, radius, diameters, width, thickness, and mass or weight:

    - the metre and the decimetre are used for lengths,
    - the centimetre is used for radius, widths and thicknesses,
    - the radius class unit or "rad" (equal to 2 cm) is used for diameters, widths and thicknesses,
    - the kilogram and tonne are used for mass (see the chapter on *Weight Scaling*), and
    - whole number units are used for piece counts (i.e., 527 Christmas trees - see the *Special Forest Products* chapter).

2. Derived units (those units calculated from the base units such as cubic metres):

    - the cubic metre, cubic decimetre and the stacked cubic metre are used for volumes,
    - the square metre and square decimetre are used for areas, and
    - the weight scale ratio is expressed in cubic metres per tonne.

6.1.2 The British Columbia Metric Scale

In British Columbia the official scale rule for purposes of scaling under the *Forest Act* is the British Columbia Metric Scale. This scale rule uses Smalian's formula to calculate the volumes of individual logs. The net firmwood volumes, expressed in cubic metres, are recorded.

6.1.3 Errors in Measurement

No measurement is exact. It instead represents a range within which the true value lies. The graduations used in scaling, such as the “radius class unit” or rad, allow any measurement falling within a range of 2 cm to qualify as a single unit. Similarly, length measurements allow any measurement falling within a range of plus or minus 0.1 m to be recorded as a single unit. These divisions are established to allow rapid measurement and

to reduce errors. Standardized units, methods and conventions, combined with good training and reliable tools also contribute to acceptable error levels.

Errors can be classified into four kinds:

Mistakes	Mistakes can include incorrect use of an instrument, recording errors, and calculation errors. Large mistakes are detected by systematic checking of all work and may be corrected by redoing part or all of a job. Small mistakes can be very difficult to detect, because they merge with other types of errors. Good practice is needed to minimize mistakes.
Compensating (accidental) Errors	These errors are due to the nature of the object being measured, variable environmental conditions, limitations in instruments, and dependence on assumptions. Positive errors will, on average, be balanced by negative error.
Systematic Errors (bias)	These errors are recurring, relatively constant, and are not compensating. Bias may be caused by faulty equipment, technique, subjectivity, and dependence on erroneous assumptions.
Sampling Errors	These errors are due to faulty sample design including poor estimates. The magnitude of error can be estimated from the variance of the population and the sample size, and can be reduced, or rendered largely self-compensating, by adhering to an objective sampling approach.

6.2 Measuring Log Dimensions

Following consistent and recognized procedures for measuring log diameters and lengths is one of the most rigorous tasks of the scaler. It is important to develop identical ways of taking measurements throughout the province so that meaningful data is provided for users on an equitable basis. The scaling procedures are defined in the *Scaling Regulation* and this section explains those procedures.

Where this chapter describes the measurements required for the determination of volume, the chapter on *Timber Grading* contains more information about measuring logs or slabs for the determination of grade, also defined in the *Scaling Regulation*.

6.2.1 Measuring Log Diameters

The objective of measuring log diameters is to record the single rad class that most closely represents the end area of a log, while avoiding excessive measurement. With the use of a BC Metric Scale Stick, radii for the purpose of volume calculations are found by:

- measuring, in rads, across the diameter, along a plane perpendicular to the longitudinal axis, inside the bark of each end,
- if a log has an elliptical or oval (egg shaped) cross section measuring two diameters at right angles to one another, through both the short and long axis of each end, averaging the diameter measurements, and rounding the result to the nearest even number where the averaged measurement falls exactly half-way between two radius classes,
- if a log has an irregular cross section determining the approximate area of the cross section by measuring two or more axes of the cross section and determining the radius of a circle with an equivalent area, and
- recording the rounded, average measurement. This measurement, if expressed as a diameter in rads, is the same as the radius in centimetres.

6.2.1.1 Measuring Round and Out of Round Log Ends

Figure 6.1 shows where measurements are taken on elliptical and oval logs and how they are averaged.

Diameter measurements are taken through the geometric centre rather than the growth ring centre. The geometric centre is found by first measuring at the widest point of the short axis and then measuring the long axis at right angles to the short axis.

Voids or abnormal protuberances are not considered when measuring diameters. Voids are accounted for in firmwood deductions as holes or missing wood and protuberances are outside of the normal line of taper. Abnormal protuberances occur when logs are bucked through a knot, burl, or goitre.

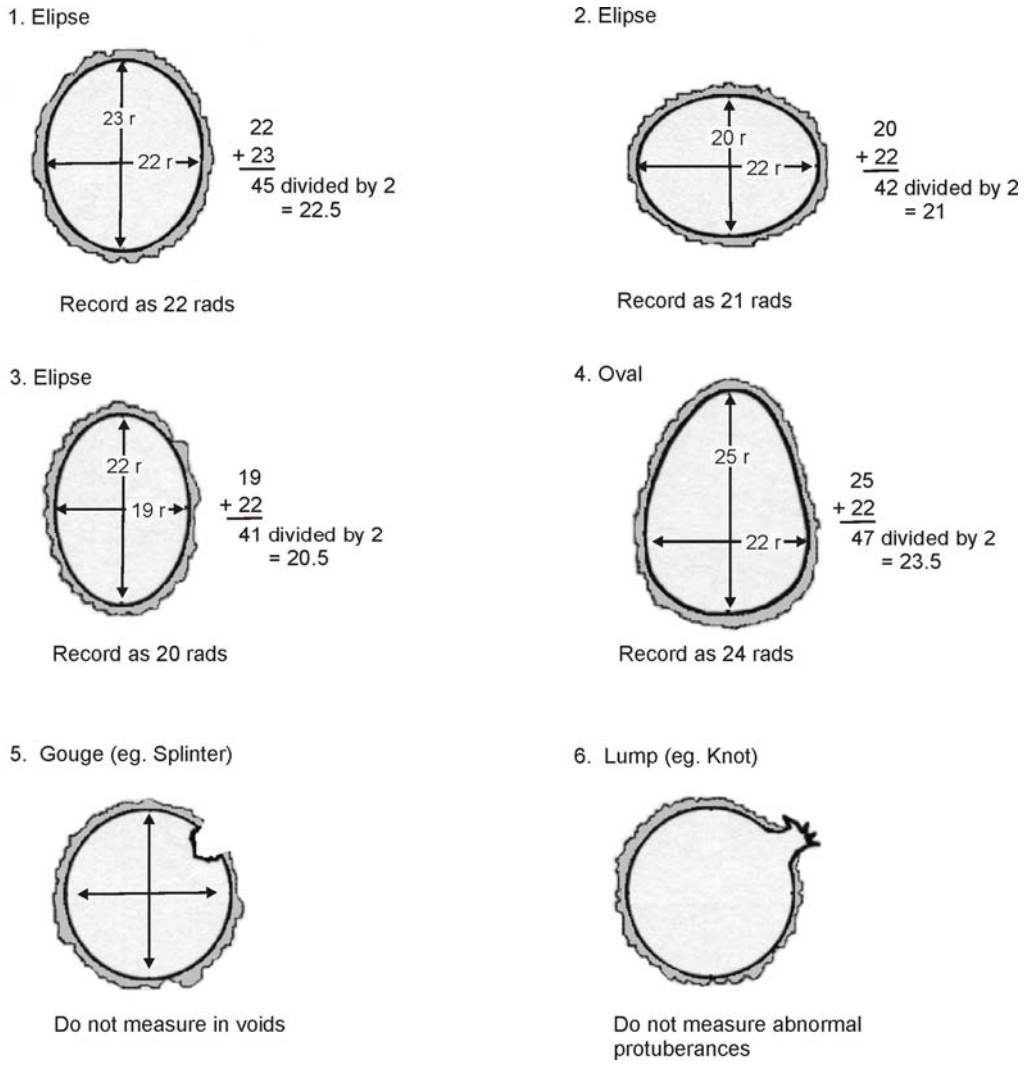

Figure 6.1 The Method for Measuring and Averaging Diameters.

6.2.1.2 Measuring Shattered and Split-Back End Diameters

It is often difficult to measure across the end of a log with a shattered or split back end. They are measured by callipering the log at a point where the diameter of the log is obtainable, at a point as close as possible to the end (allowing for bark). If callipering at some distance from a top end, it may be necessary to reduce the callipered diameter to account for tapering down. If callipering some distance from a butt end, it may be necessary to increase the callipered diameter to account for tapering up. Callipering is described in detail in Section 6.2.2.1.

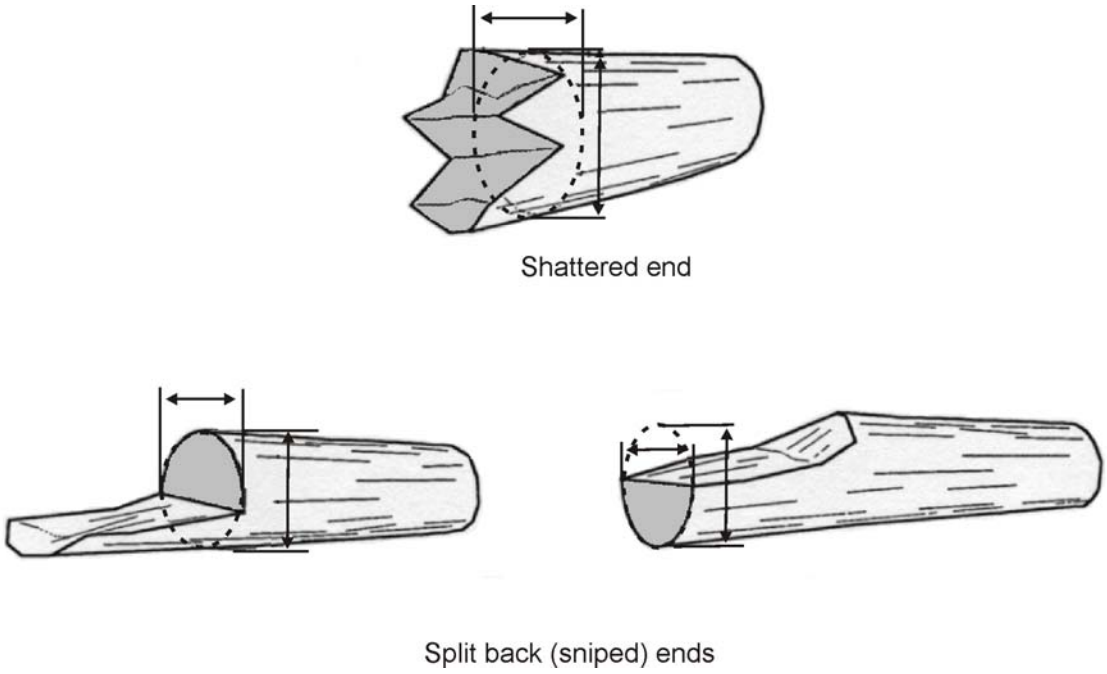

Figure 6.2 The Method for Measuring Shattered and Split Back Ends.

In all cases, the diameter is envisaged as if the wood was there, and if there is a significant amount of missing wood, a deduction for missing wood should be taken as described in the *Firmwood Defects and Conventions* chapter.

6.2.1.3 Measuring Irregular End Diameters

Irregular ends are difficult to measure in the normal manner because it is not often easy to choose the points to measure from. You must envisage a circle, ellipse, or other shape which best represents the firmwood volume of the irregular shape. Normally, irregular and fluted logs will fit in a circular or elliptical shape, where the widest part of the short axis can be found by taking sufficient measurements and the widest part of the long axis found by taking more measurements, then averaging the two. Flared and fluted logs must also have the flare accounted for. That is, any flutes or portions of flutes which are outside of the normal line of taper are not included in the assessment.

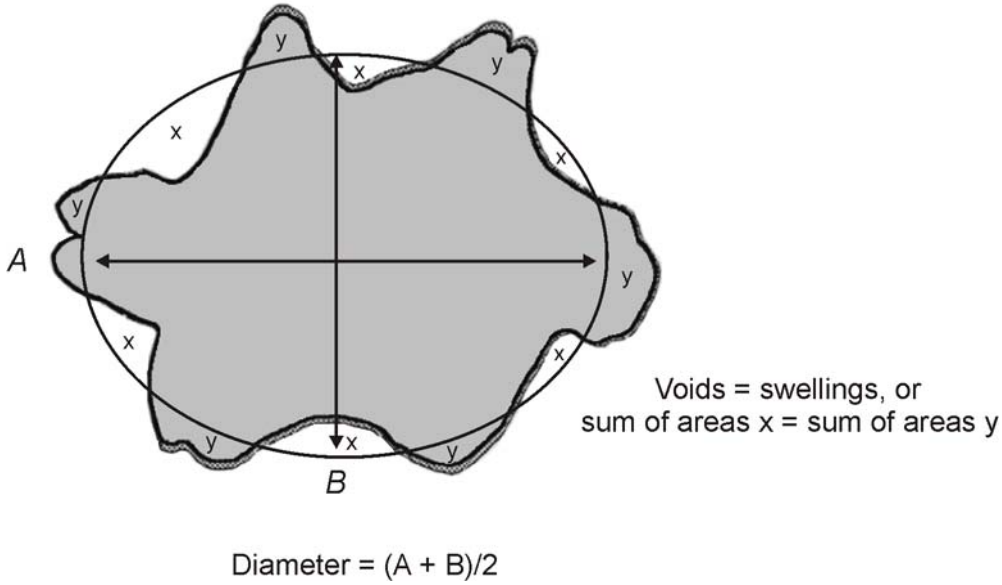

Figure 6.3 The Method for Measuring Irregular Diameters – Except Flared Butts.

6.2.1.4 Measuring Forked End Diameters

Logs are often forked and normally come into a scaling yard already bucked off at or very near the juncture (crotch). The scaler is presented with a range of log shapes depending on where the buck occurred and not only is challenged to obtain a diameter, but also to determine a length when forks are bucked at different lengths.

If the buck is located:

- just below the crotch of the fork, the shape is most likely oval or elliptical, and is measured as such. That is, across the widest part of the short axis and at the widest part of the long axis. The log may be callipered further down the log to confirm the measurement,

- at the crotch of the fork, the shape is evolving into distinctly separate stems, showing bark in between the two, but the adjoining faces are still in contact and quite flattened, and will not present enough of the individual cylinders to provide a diameter measurement from each segment. The face is measured as an oval or ellipse but the measurement may have to be reduced to compensate for additional swell. Callipering further down the log is more reliable in these cases, and

- above the crotch of the fork, the individual stems become distinctly circular in form. In these cases, the log should be callipered further down the log where the main stem is cylindrical and an adjustment made to account for normal taper. If both forks are of similar size (where the large diameter is no more than 1.5 times the smaller diameter), find the average diameter in rads of each stem, add the unit volumes for the two diameters, and locate a radius class unit closest to the sum. If the forks are of unequal length, an adjustment must be made to the log length to place it half way between the long and short fork.

6.2.2 Measuring Flared Butt Diameters

The bottom of many trees are reinforced by way of a flared, swollen or fluted portion, which develops in response to wind stress and degree of root spread. Logs bucked from this area (butt logs) are typically neiloid in shape. Neiloids are discussed in the *Smalian's Formula* chapter of this manual.

> Smalian's formula tends to overestimate the volumes of neiloids. Therefore, it is important that scalers compensate by reducing the actual end measurement to compensate for any swell, flare or fluting. Failure to do so is a serious cause of over scaling.

There are two methods of finding flared butt diameters - callipering and projecting the normal line of taper. Although callipering is by far the commonest method, it is good practice for scalers to use both methods on the same log from time to time, comparing the results to develop confidence and confirm technique.

6.2.2.1 Callipering

"Callipering" a log means to measure the diameter at a point other than at the cut face by placing the scale stick across the log and projecting two perpendicular sight lines to the points where the measurement is read (Figure 6.4). The novice scaler may practice callipering by first selecting a log without flare and directly measuring across its end in the normal manner (Section 6.2.1). Callipering this log at a point close to the same end (allowing for bark) should give the same measurement. Practice will build confidence in callipering.

The larger the log, the more skill and care is required to get accurate dimensions and the greater the potential to over scale if the technique is not well developed.

Some points to remember when callipering are:

- select a spot just above the flare,
- keep sight lines perpendicular to the scale stick,
- take two measurements on out of round logs,
- calliper inside bark or subtract bark thickness,
- project the normal line of taper from the calliper point to the butt end face and add one or more rads (if required), and
- practice and compare results to the other method from time to time.

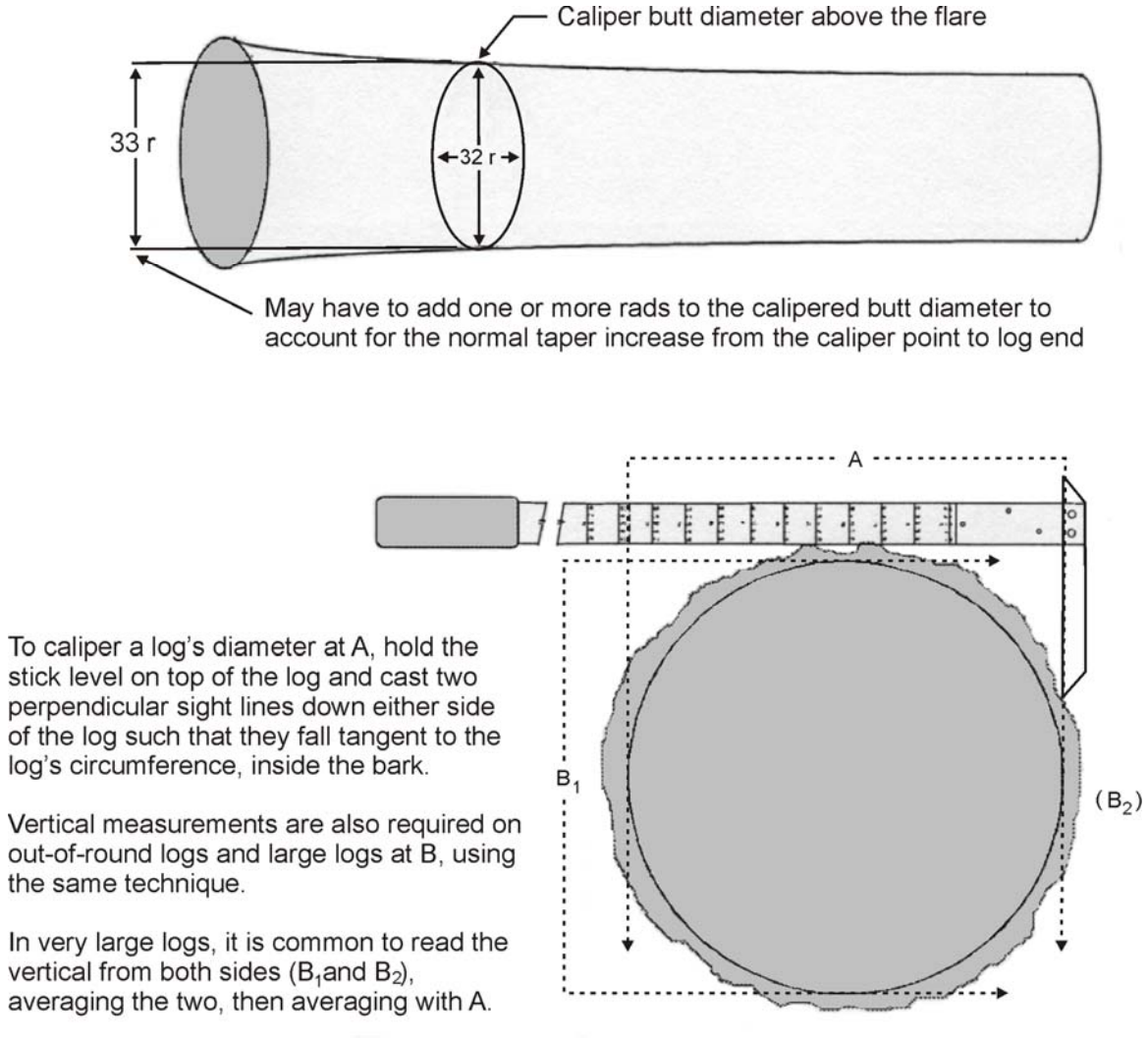

Figure 6.4 The Method of Measuring Butt Diameter by Callipering.

6.2.2.2 Projecting the Normal Line of Taper

The other method for measuring flared butts is for the scaler to stand behind the flared end and project the normal line of log taper through the flare to the cut face as illustrated in Figure 6.5.

Novice scalers will find it helpful to use a logger's tape to project the line of taper: hook the tape at the top end of the log on one side, bring it back down the log and drape it over the flare. When pulled taut, the tape can be made to follow the taper and a mark can be placed upon the butt face. The process is repeated on the opposite side, and the projected diameter is measured between the two marks. This is not only a good way to learn the technique (which, when mastered, can be done by line of sight) but also can be useful, even to the expert, on the more challenging flared logs.

Where logs are out of round, they most frequently lie with their larger diameter, or long axis, in the horizontal plane. While it is easy enough to project the line of taper along both sides or top of a log, it is nearly impossible to project a line of taper along the bottom of a log because it is on the ground. Therefore, when scaling out of round logs, scalers should consider measuring the narrow diameter, or short axis, by callipering.

Projecting the normal line of taper is most commonly used on larger logs where callipering may be awkward or hazardous. On smaller flared logs it is generally expedient to calliper. Scalers should become adept at both methods.

Points to remember when projecting the line of taper:

- stand back from the butt end (approximately 1.5 to 3 m),
- project the normal line of log taper to the butt end face,
- measure, at the butt face, between points where the projected lines of taper intersect the butt face, and
- exercise caution on out of round logs.

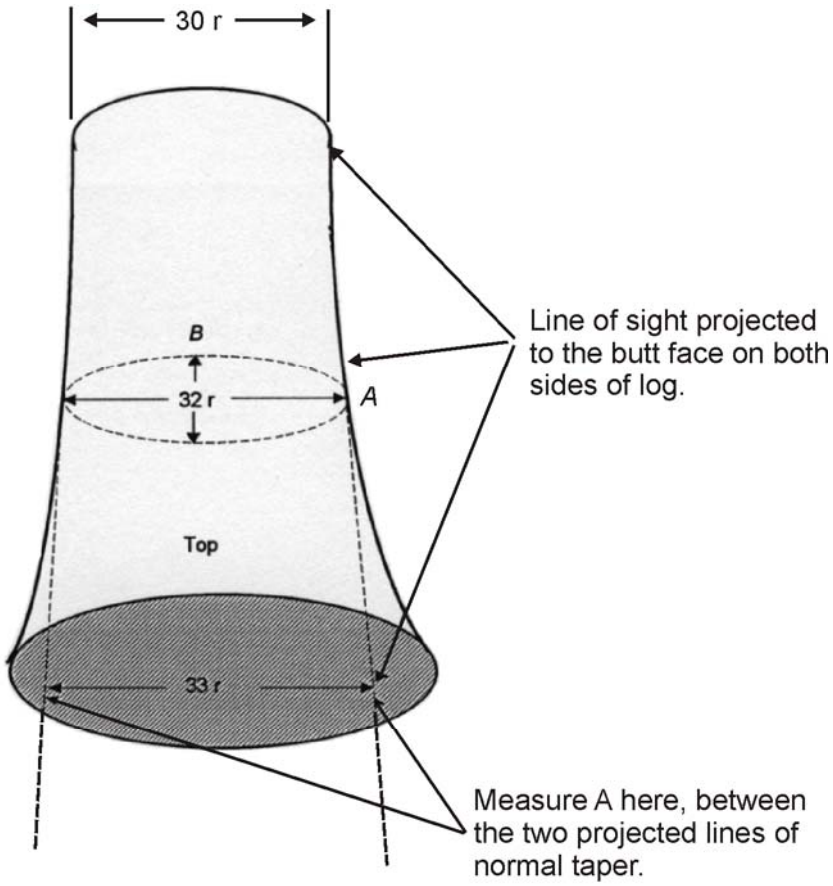

Figure 6.5 Method of Measuring Butt Diameter by Projecting the Normal Log Taper.

6.2.3 Measuring Lengths

The length of a log or slab is the distance between two planes that are perpendicular to the longitudinal axis of the piece and situated at the geometric centre of each end face.

To locate an end face, all logs are deemed to be "bucked" for scaling purposes. There are three kinds of bucking; real, pencil, and conceptual. These terms apply to practices which are separate from each other, and will affect recorded log lengths in the scaling and grading process.

"Real bucking" is the point where the log is cut with a saw, and in the great majority of cases, it is the point where measurements are taken. Most logs are bucked perpendicular to the longitudinal axis, or "bucked off square", so it is only necessary to measure from the edge of one face to the edge of the other end face. Logs cut on the bias are measured from face to face through the geometric centre.

"Pencil bucking" refers to the act of recording one piece as two or more pieces (with a pencil and paper), as in the case of diameters less than 5 rads (10 cm). Scalers often mark the log at the point where the log becomes 5 rads in diameter, so that check scalers, and others, can confirm the recorded measurement.

"Conceptual bucking" is used where a scaler will think of a log as being segmented when assessing a log's volume and value, but does not record one piece as two or more pieces. In exercising the *grading concept* as it applies to crook and sweep for example, a scaler will view the log as being bucked into two or more pieces. The *Timber Grading* chapter provides many examples of this type of "bucking". In determining volume, a scaler will often "visually fold in" a portion of a log to fill in a void, and measure a length from the point of the "buck". This chapter provides examples for determining length. Different terms are used for this type of bucking, depending on locale. "Visual bucking" and "mental bucking" are common expressions of the concept, and as computer usage increases in scaling, other terms such as "virtual bucking" are sure to appear, but they all mean the same thing.

The following figures and sub-sections demonstrate length measurement principles.

6.2.3.1 Length Rounding Conventions and Measuring Tools

Lengths are measured in metres to the nearest tenth of a metre (0.1 m or 1 dm) by using a scale stick or a steel tape calibrated to 0.05 m divisions. The steel tape is more accurate and preferred. Tapes *must* be used for measuring weight scale sample logs.

Where the measurement is 0.05 m or 0.5 dm from the nearest tenth of a metre, the length is rounded to the nearest even tenth of a metre.

Examples: 12.34 is recorded as 12.3

12.35 is recorded as 12.4

12.25 is recorded as 12.2

6.2.3.2 Finding the Geometric Centre of a Log for Length Measurement

Most logs are bucked perpendicular to their longitudinal axis and measuring from the edge of one end face to the matching edge of the other end face gives the same result. On bias cut ends, however, the scaler must estimate where the geometric centres are and then measure to these points as shown in Figure 6.6.

The geometric centre of a log is the point which is equidistant from the outer edges. It can be different from the "centre of gravity", which is found by the intersection of a line through the widest and narrowest points when measuring diameters. On round and elliptic logs, the centre of gravity is also at the geometric centre, but on oval and irregular shapes it is not. See Section 6.2.1 for more information on diameter measurement.

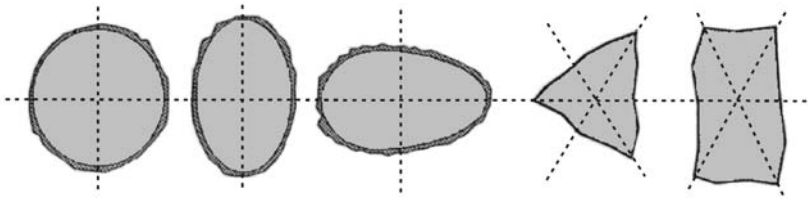

Geometric centres of log ends are equidistant from outside edge.

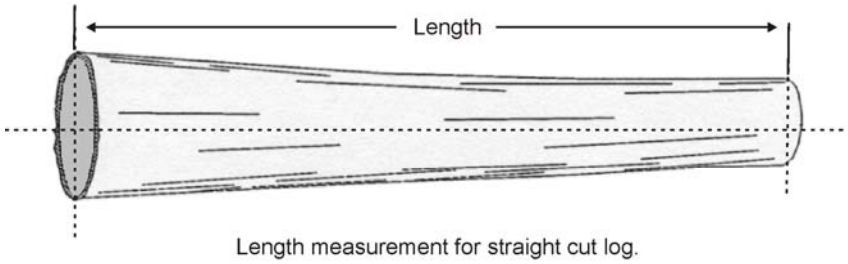

Length measurement for straight cut log.

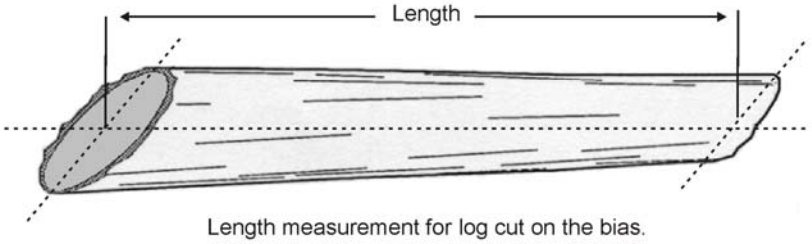

Length measurement for log cut on the bias.

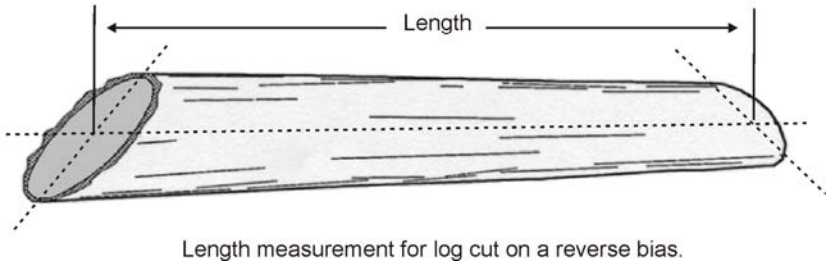

Length measurement for log cut on a reverse bias.

Figure 6.6 Length Measurement of Logs Through the Geometric Centre.

6.2.3.3 Measuring Lengths of Butt Logs with Undercut

Undercuts are not considered in length measurement, nor is the felling hinge. However, in the determination of net volume, a deduction for missing wood may be required, but normally; undercuts are not a significant volume loss because they tend to fall outside of the line of taper as shown by the dashed line in the figure below. It is also necessary to consider bias as shown in Figure 6.6, if present.

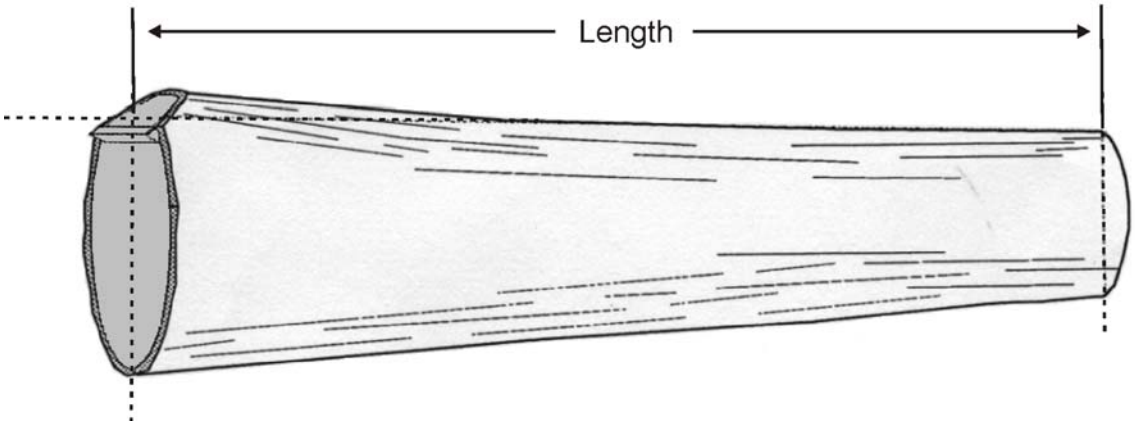

Figure 6.7 Length Measurement of Logs with Undercut.

6.2.3.4 Measuring Lengths of Logs With Portions Under Ten Centimetres

The length of a log or slab is measured from where the log diameter or slab thickness first becomes 10 cm or greater when measuring from the smaller end, or top. Lengths for log diameters or slab thickness less than 5 rads must be recorded separately as firmwood rejects. These are instances where a single physical piece of timber is recorded as two separate scale data entries, or "pencil bucked". The log should be marked with crayon or paint at this point, to substantiate the point of measurement.

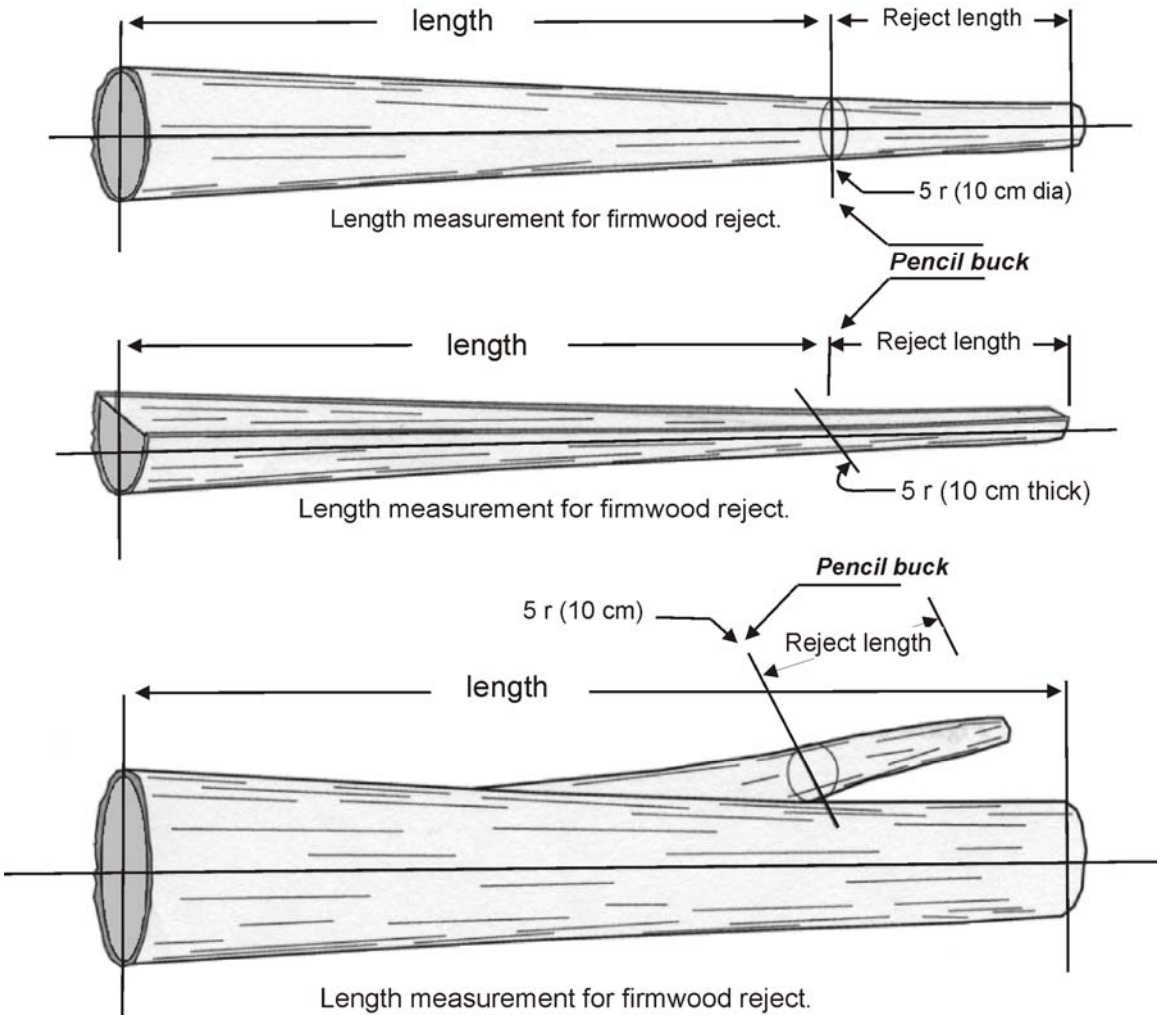

Figure 6.8 Length Measurement of Logs and Slabs with Segment Under 10 cm.

6.2.3.5 Measuring Lengths of Logs With Shattered Ends

Logs with shattered ends offer another challenge. Shatter occurs when a log is stressed beyond its breaking point, and may or may not be "trimmed up" in the bucking process. The scaler must "visually fold in" the projections to compensate for the missing wood in the voids.

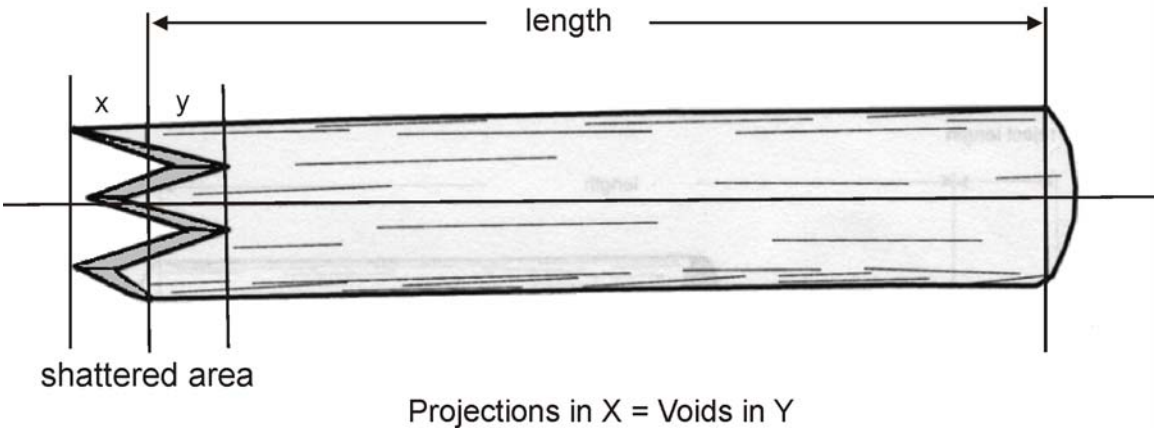

Figure 6.9 Length Measurement of Logs with Shattered Ends.

6.2.3.6 Measuring Lengths of Logs with Sniped Ends

Logs are often split off or "sniped" at one or both ends. Bending stresses cause the log to split before the buck is completed. Unlike shattered ends, where the scaler "folds back" protrusions to fill the voids and measures from that point, this type of log requires a firmwood deduction to account for the missing wood. See the *Firmwood Defects* chapter for deduction methods.

Lengths are measured according to the following examples, starting at the point where the sniped end first becomes 10 cm thick. Measure the firmwood reject length from the "sniped" end to a point where the snipe first becomes 10 cm thick. A "pencil buck" occurs at this point, and the portion less than 10 cm must be recorded as a separate firmwood reject.

The following illustration shows two forms of sniping.

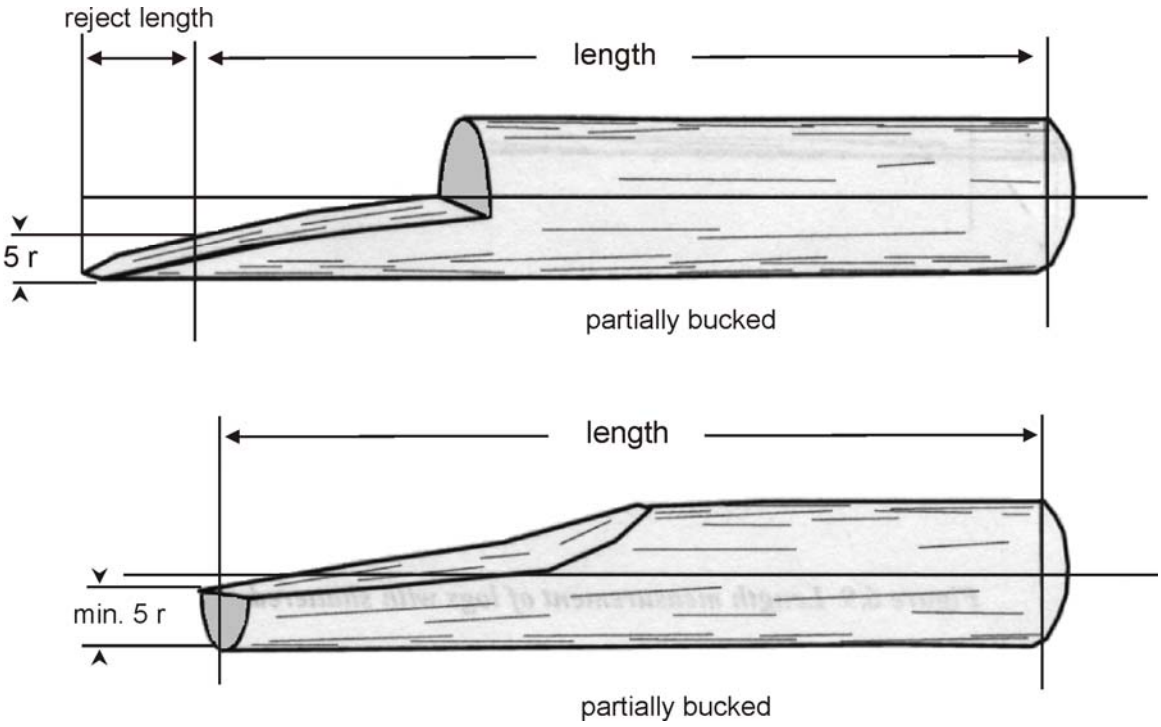

Figure 6.10 Length Measurement of a Partially Bucked Split Back (sniped) End.

6.2.3.7 Measuring Lengths of Logs with Missing Chunks

Sometimes a scaler will encounter logs with burned saddles or missing chunks in the central portion of the log. On such logs measure the gross length to the cut ends and make a firmwood deduction for the missing volume between the ends.

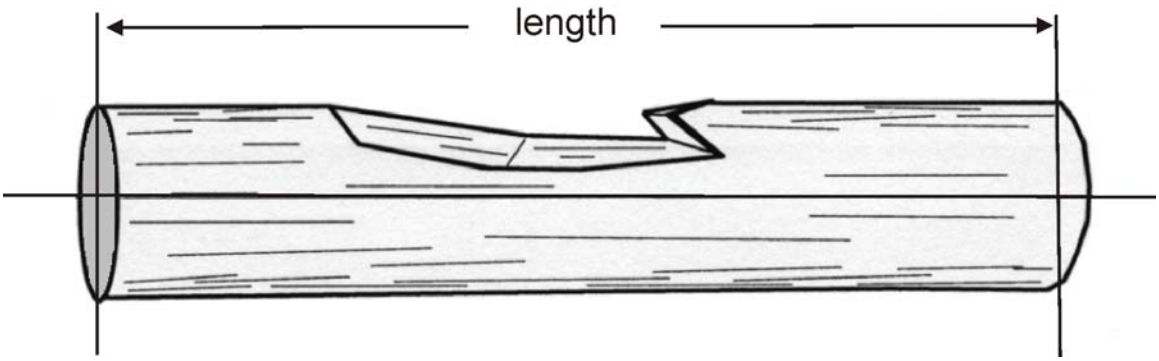

Figure 6.11 Length Measurement of a Log with Missing Chunk.

6.2.3.8 Measuring Lengths of Logs with Forks

Logs are often forked and normally come into a scaling yard already bucked off at or very near the juncture (crotch). The scaler is presented with a range of shapes depending on the relative fork sizes and where the bucks occurred, and not only is challenged to obtain a length, but also to find a diameter when forks are bucked at different lengths and different points.

In general:

Logs with forks bucked off at or near the crotch are scaled as one piece. The diameter or length may need adjustment in order to get a fair and accurate dimension for the log. See the section on diameter measurement for information on obtaining a diameter.

Logs with one fork remaining are scaled as one piece. If the attached fork approaches the size and taper of the main stem, the top diameter of the fork will serve as the top diameter of the log. If the fork is stunted in relation to the main stem, an increase in the top diameter may be required.

Logs with more than one fork remaining may be scaled as one piece if both forks are of similar size (thirty percent) and the crotch occurs near the mid-point of the log length. Under these circumstances, it is possible to find the average diameter in rads of each stem, locate the unit volumes which correspond to the measurements, add the unit volumes, and locate a radius class unit closest to the sum. If the forks are of unequal length, an adjustment must be made to the log length to place it half way between the long and short fork.

If the forks are not similar in diameter and the crotch is not near the mid-point log length, they may be scaled as two or more pieces. Forks or portions less than 10 cm in diameter are also recorded as separate firmwood reject.

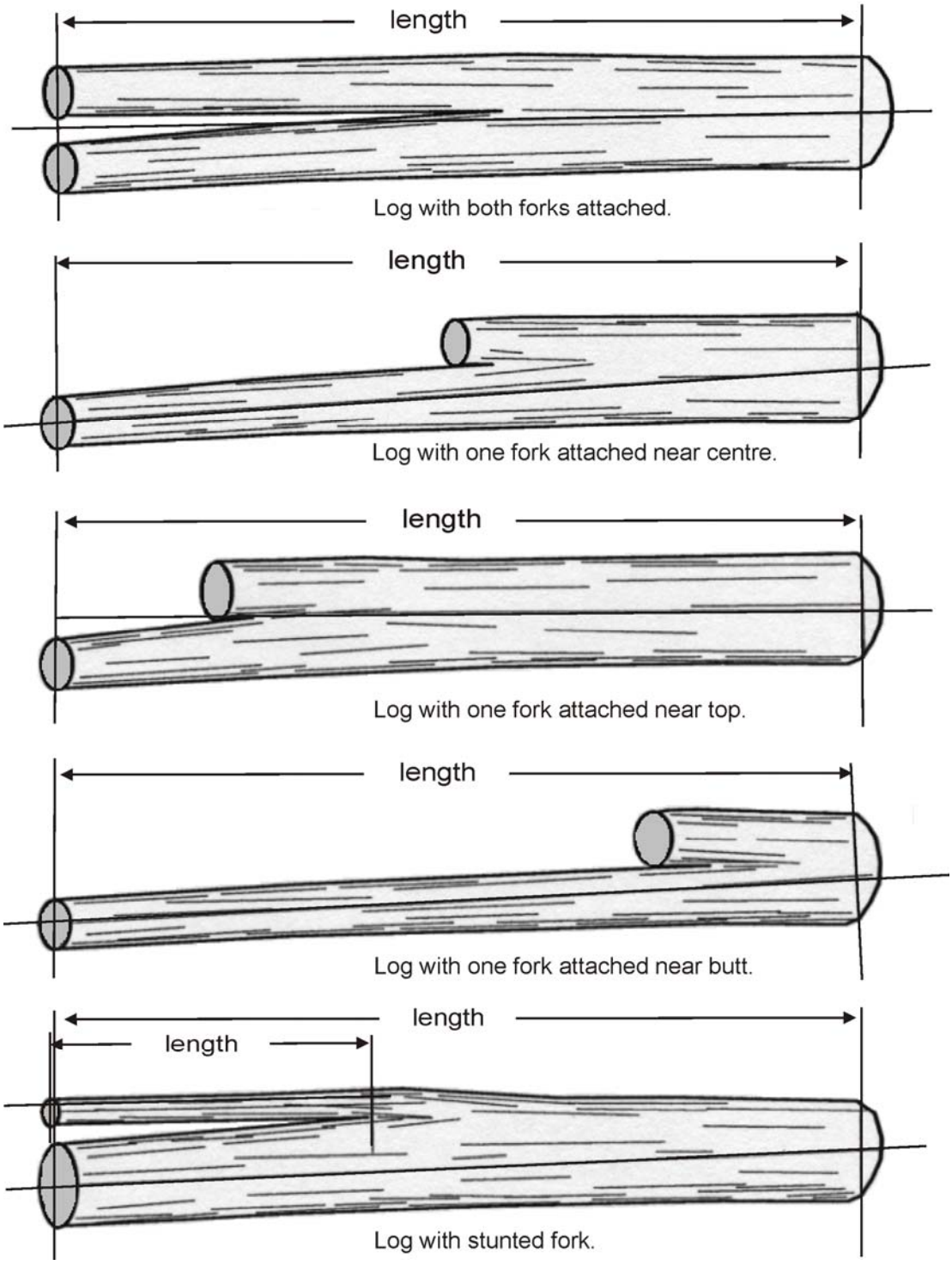

Figure 6.12 Length Measurement of Forked Logs.

6.2.3.9 Measuring Lengths of Logs with Sweep

Length measurement for a log with sweep follows the contour through the geometric centre of the log.

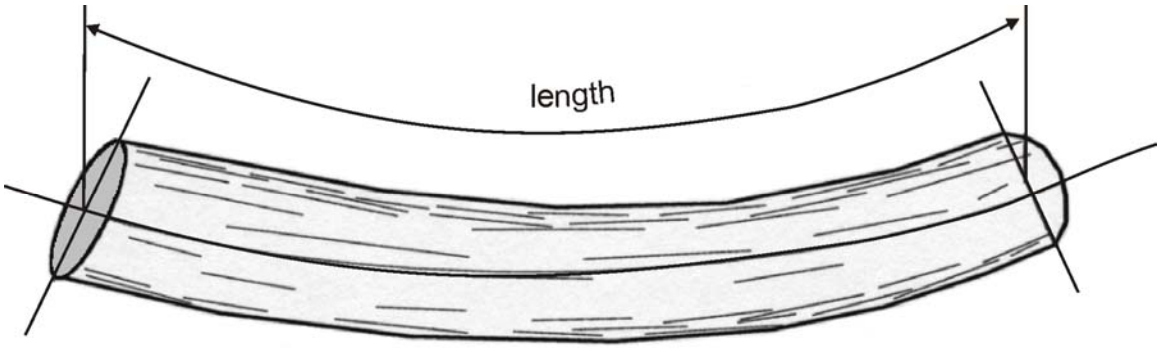

Figure 6.13 Length Measurements of Logs with Sweep.

6.2.3.10 Measuring Lengths of Logs with Crook

Length measurement for a log with crook follows the contour through the geometric centre of the log.

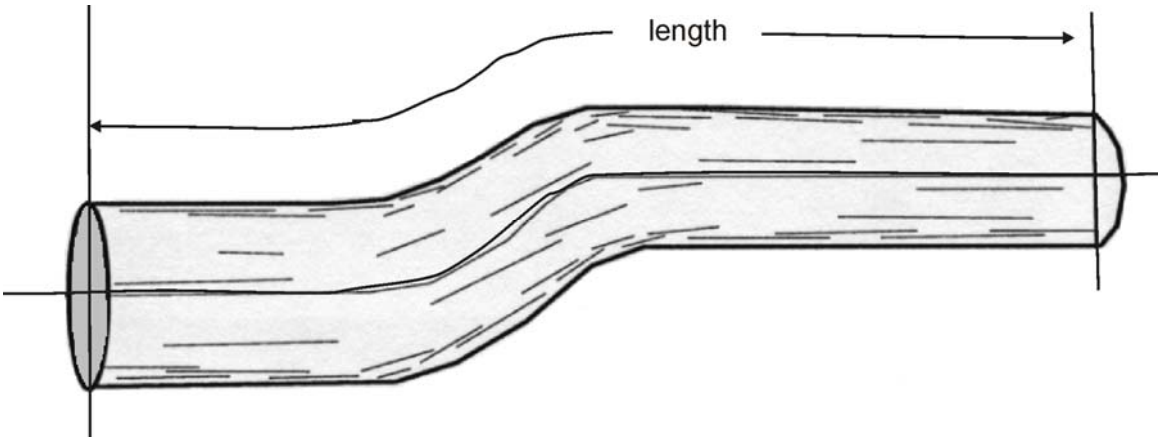

Figure 6.14 Length Measurement of Logs with Crook.

6.3 Measuring Slab Ends

In scaling jargon, a slab is a piece of timber that has fractured along a plane that is roughly parallel to the longitudinal axis of the original log. The shapes of slabs are quite variable, ranging from nearly "plank-like" to virtually perfect semi-cylinders; however, most fall between the ideals. Even so, they can be seen as roughly triangular (three sided), quadrilateral (four sided), or semicircular in end view, and may be classified as external, or those having part of the outside circumference of the log in their shape, and internal, or those having no part of their outside circumference in their shape.

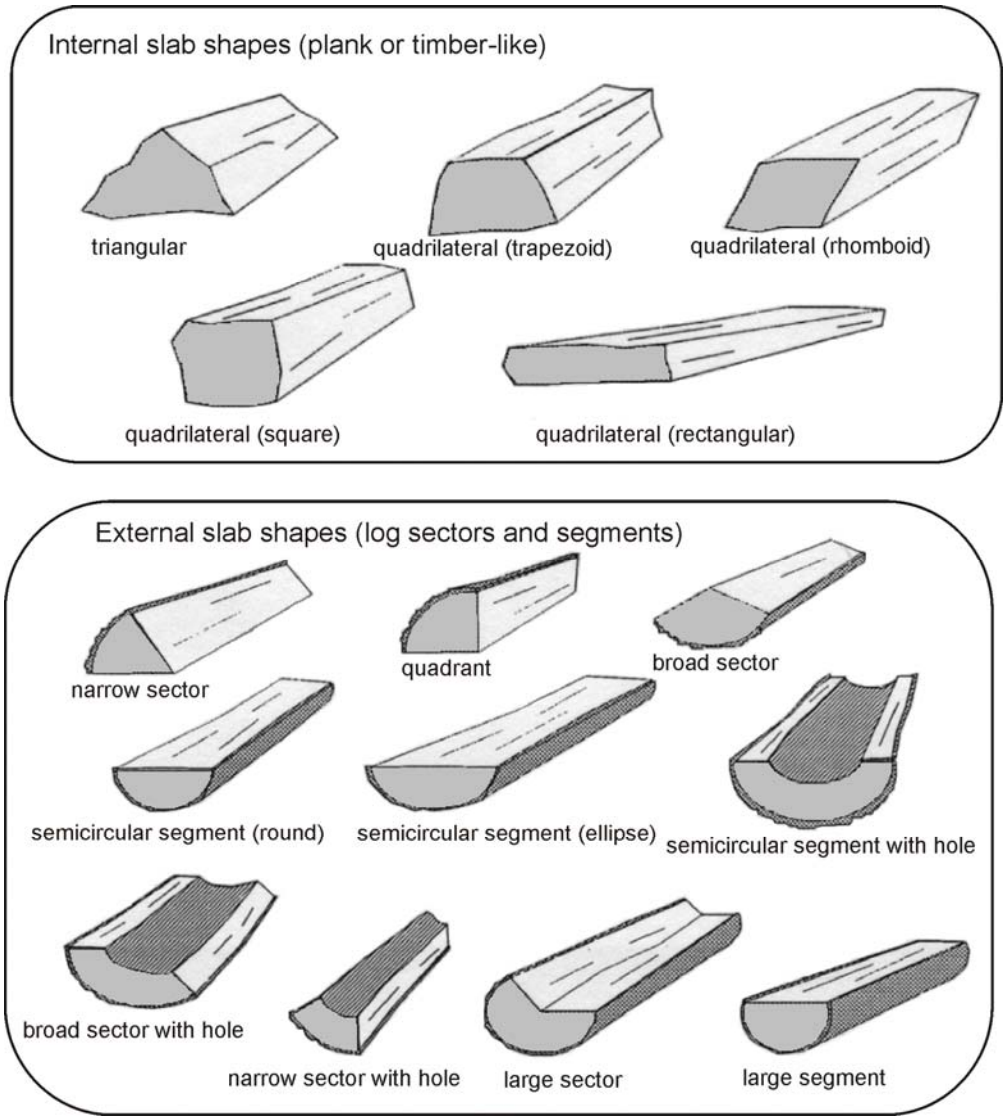

Figure 6.15 Typical Slab Shapes.

As stated in the Formulas section of this manual, Smalian's formula uses an average of the two end areas projected over the length of the piece to determine the volume. It follows that the challenge to the scaler measuring a slab is to record the two radius class units which fairly represent the areas of both slab ends and which, when inserted into Smalian's formula, will yield the firmwood volume. This derived or "effective" radius can be determined either by enclosing the end area with one of a "semicircle", a "pie wedge", a quadrilateral (four sided) or a triangle (three sided) shape, depending on which most nearly matches the slab end. Regardless of the shape, measurements are always taken at right angles (90 degrees) to one another. Internal slab shapes which are quite irregular may require more than one measurement on an axis to arrive at an average width or average thickness.

6.3.1 Measuring Semicircular Slab Ends

The most frequently encountered external slab shape has a "semicircular" end profile. A true semicircle is exactly one-half of the original circle. Normally logs are not perfect circles and rarely do they fracture exactly in the middle. Therefore, what we are calling a semicircle is more properly termed a segment, or the area transcribed by the intersection of a circle and a chord.

Although not usually perfect semicircles, these shapes may be viewed, for scaling purposes, as being half of a whole or "parent" log of round, oval or elliptical shape, as shown in Figure 6.16.

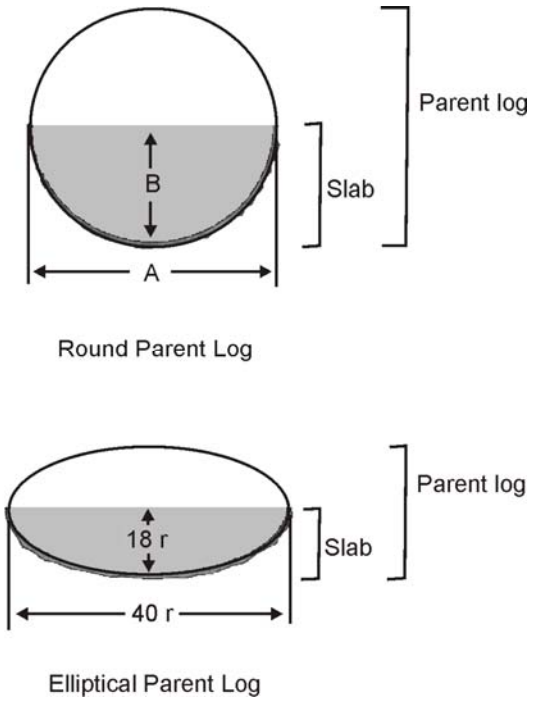

Figure 6.16 Measurement of a Semicircular Slab End.

To find the volume of a semicircular slab it is necessary to:

- first derive the average diameter of an end of the parent log, from two measurements of the end of its segment,
- find the unit volume of the end of the parent log,
- divide the unit volume in two to find the unit volume of the end of the segment,
- record the radius class unit which is closest to the segment's unit volume,
- repeat the above process for the other end of the slab, and
- record the length of the slab so that a volume may be calculated.

The scaling method to find a radius class representing the unit volume of the slab in Figure 6.16 is:

The measurements are taken across the width and thickness of the semicircular slab. The long-standing convention is to term the dimension "A" which falls across what is, more or less, the parent log's diameter as the width. The other dimension "B", perpendicular to "A", and which is, more or less, the parent log's radius is termed the thickness. The width is measured at the point of maximum width and the thickness is measured at the point of maximum depth at right angles to the width, ignoring any minor irregularities.

Then, the average diameter of one end of the parent log is derived from the measurements taken of its slab. The formula for determining the average diameter of one end of the parent log from the measurements of its semicircular slab is:

$$\text{Parent log diameter} = \frac{A+2B}{2}$$

For example, if A = 40 rads and B = 18 rads,

$$\text{Parent log diameter} = \frac{40+2x18}{2}$$

$$\text{Parent log diameter} = \frac{76}{2}$$

Next, the unit volume for 38 is located on the scale stick (454) and divided by 2. Finally, the unit volume nearest to that resulting unit volume (227) is located on the scale stick, and the corresponding radius class unit is recorded. In this case, the closest unit volume is 229, which corresponds to 27 rads. The process is repeated at the other end of the slab.

6.3.2 Measuring Slab Ends and Sectors with a Hole

6.3.2.1 Measuring a Semicircular Slab End with Hole

Logs with advanced heart rot or hole may split into slab sectors or segments. To scale a semicircular slab with a hole, the dimensions for the parent log and the hole are derived, and the unit volume of the hole is subtracted from the unit volume of the parent log before division by 2.

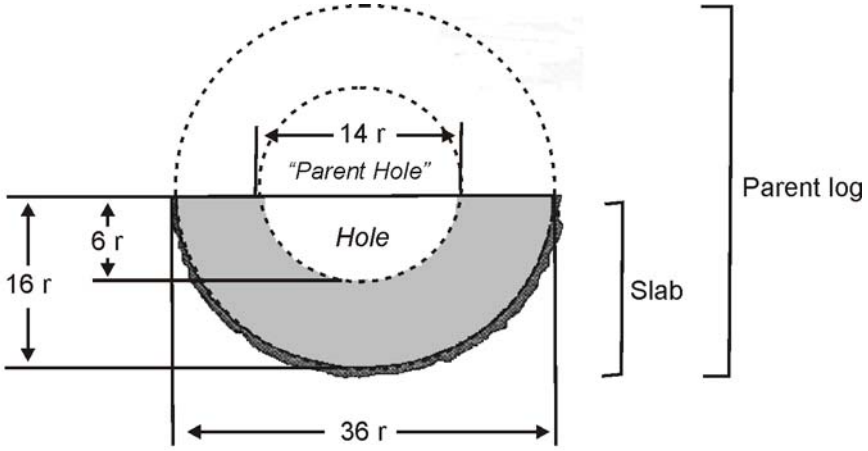

Figure 6.17 Measurement of a Semicircular Slab End with Hole.

To find the volume of a semicircular slab with a hole, it is necessary to:

- first derive the average diameter of an end of the parent log, from two measurements of the end of its segment,
- find the unit volume of the end of the parent log,
- derive the average diameter of an end of the "parent hole", from two measurements of the end of its segment,
- find the unit volume of the end of the parent hole,
- subtract the unit volume of the parent hole from the unit volume of the parent log,
- divide the result in two to find the unit volume of the end of the slab,
- locate and record the radius class unit which is closest to the segment's unit volume,
- repeat the above process for the other end of the slab, and
- record the length of the slab so that a net volume may be calculated.

The scaling method to find a radius class representing the unit volume of the slab in Figure 6.17 is: The measurements are taken across the width and thickness of the semicircular slab as described in the example in Section 6.3.2. Then, the average diameter of one end of the parent log is derived from the formula:

$$\text{Parent log diameter} = \frac{A + 2B}{2}$$

$$\text{Parent log diameter} = \frac{36 + (2x16)}{2}$$

$$\text{Parent log diameter} = \frac{68}{2}$$

$$\text{Parent log diameter} = 34 \text{ rads}$$

The unit volume for 34 rads is located on the scale stick (363).

Next, the average diameter of one end of the parent hole is derived in the same manner:

$$\text{Parent hole diameter} = \frac{14 + (2x06)}{2}$$

The unit volume for 13 rads is located on the scale stick (53) and is subtracted from the unit volume of the parent log and divided by 2 to arrive at the unit volume of the slab.

$$\text{Slab unit volume} = \frac{\text{parent log unit volume} - \text{parent hole unit volume}}{2}$$

$$\text{Slab unit volume} = \frac{363 - 53}{2}$$

$$\text{Slab unit volume} = \frac{310}{2}$$

$$\text{Slab unit volume} = 155$$

Finally, the unit volume nearest to the slab unit volume is located on the scale stick, and the corresponding radius class unit is recorded. In this case, the closest unit volume is 152, which corresponds to 22 rads. The process is repeated at the other end of the slab.

6.3.2.2 Measuring a Slab Sector with Hole

Slab sectors less than a semicircle with a hole are measured differently because it is virtually impossible to derive the dimensions of the parent log as shown in the previous example. There is not enough "meat" to reconstruct the parent log. The problem is similar with an attempt to apply the measurement technique of pie wedges as described in the next Section.

The alternative is to "flatten out" these types of slabs to form a rectangular shape and measure across their width and thickness. The net dimension may then be found as described in detail in Section 6.3.4,

where:

$$\text{Four-sided slab Unit volume} = A \times B \times 0.4$$

the unit volume nearest to the slab unit volume is located on the scale stick, and the corresponding radius class unit is recorded.

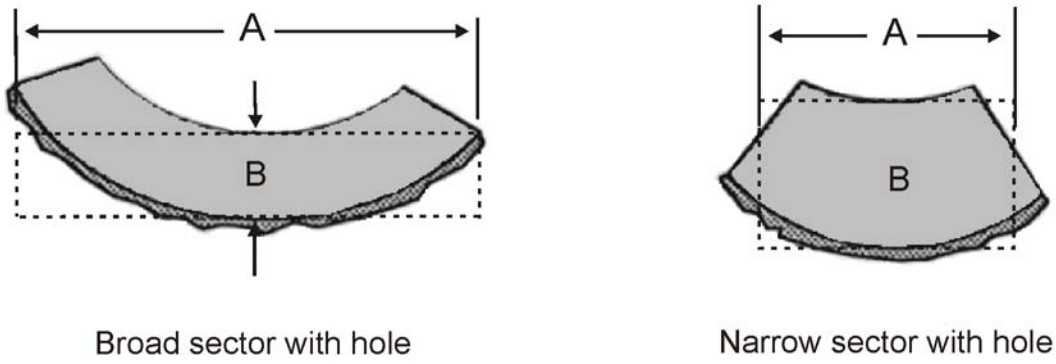

Figure 6.18 Measurement of a Sector Slab End with Hole.

Figure 6.18 depicts broad and narrow slab ends with holes. The width "A" is the average of the inner and outer circumference of the slab sector, and the thickness "B" is the average thickness of the slab. The dashed lines represent the shape if they were envisioned to be rectangular to square in profile. The difficulty in measuring the width "A" is to arrive at the average of the inner and outer circumference by the use of a scale stick. As the arc of the slab exceeds 90 degrees (1/4 of a parent log) as shown in the example on the left, the width is best represented by a measurement across the full width of the slab. If less than that, the width is best represented by a measurement on the midpoint of each flat face as shown in the example on the right. More than one measurement "B" may be required if the thickness is uneven, to arrive at an average thickness.

6.3.3 Measuring Sectors (pie wedge slab ends) Smaller than a Semicircle

Sometimes logs will conveniently split into quarters or thirds of their original end profile. Other times a less convenient fraction will result. This slab type may be categorized as

being a sector less than a semicircle, roughly a pie wedge in shape, and external, or having a portion of the original circumference of the log remaining, as illustrated in Figure 6.19. Examples for scaling with different methods follow.

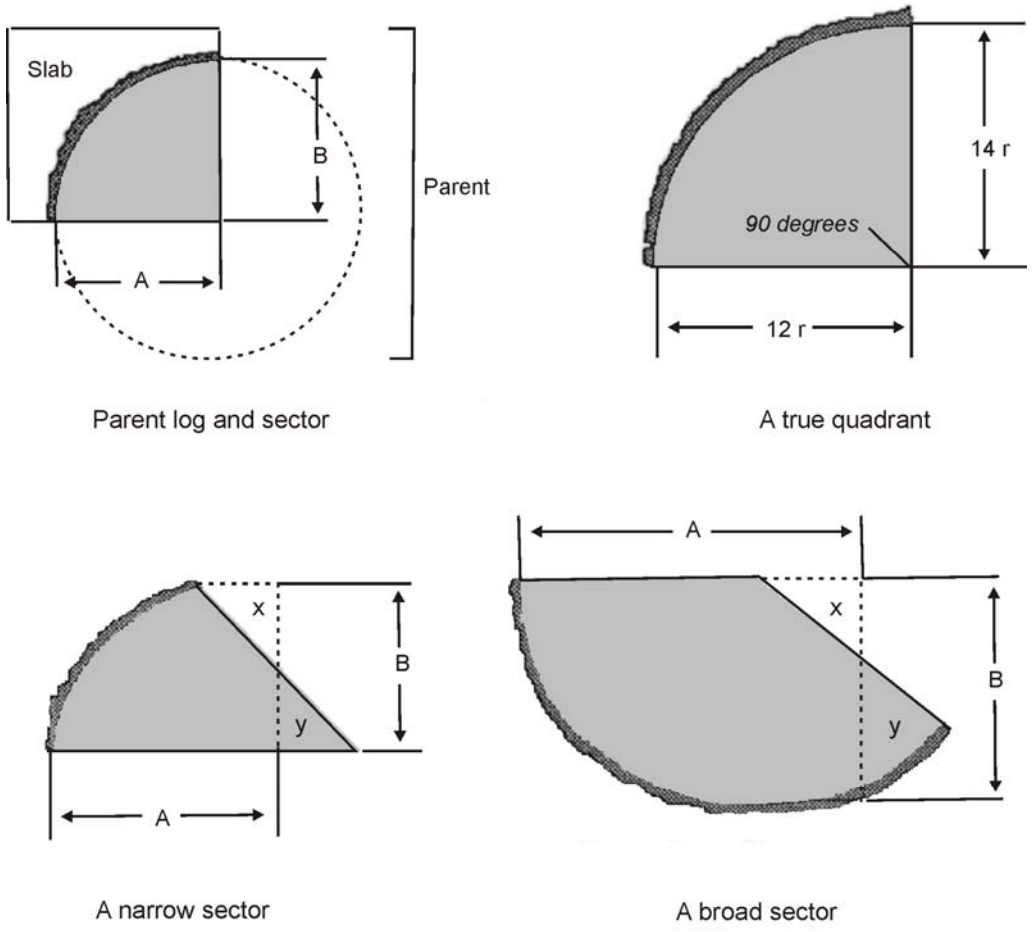

$$\text{Average Diameter} = \frac{A + B}{2} \text{ where area x = area y}$$

Figure 6.19 Measurement of Sectors (pie wedge slab ends).

6.3.3.1 Measuring Small Sectors by Averaging the Dimensions

Figure 6.19 illustrates various sectors smaller than a semicircle. These shapes may be scaled by direct measurement without using a factor relating to a proportion of a "parent" log as described next. This method, called the "quarter-round" method, is preferred for slabs which do not break into convenient fractions. Illustrated are quadrants, narrow sectors and broad sectors. As with the factored method, the measurements are taken at A and B and averaged to arrive at an effective radius class unit for recording.

The average diameter in rads of the end of a sector slab is derived from the measurement of its two faces. The measurement of a quadrant allows both measurements to be taken directly off each face because they are at 90 degrees to each other. Broad and narrow sectors must be measured with A being "drawn in" to the point where the void x is about equal to the projection y as shown on the examples so that the *two measurements are taken at 90 degrees to each other*. Overstatement of volume will result if this is not done.

To find the volume of a sector slab by averaging it is necessary to:

- first average the two measurements of an end of the slab,
- record the average,
- repeat the above process for the other end of the slab, and
- record the length of the slab so that a volume may be calculated.

The scaling method to find a radius class representing the unit volume of end of the sectors in Figure 6.19 is as follows.

The formula for determining the average diameter of a slab sector is:

$$\text{Average diameter} = \frac{A+B}{2}$$

Replace the variables *A* and *B* with the measurements given. (*A* = 12 and *B* = 14).

$$\text{Average diameter} = \frac{12+14}{2}$$

$$\text{Average diameter} = 13 \text{ rads}$$

The radius class unit is recorded, and the process is repeated for the other end of the slab

6.3.3.2 Measuring a True Quadrant and Other Sectors by Applying a Factor

Figure 6.19 also includes a quadrant (1/4 of a circle) of an external slab end. This example is 1/4 of an elliptic log with a measurement of A = 12 rads and B = 14 rads. The distances A and B (in cm) are actually two radii of the parent log's end. Therefore, if the parent log is a true circle, A and B will be identical. If the parent log end is elliptic, as in this example, the two radii will differ and the parent log's radius is their average.

When the two radii and the faces are at 90 degrees to each other as in this example, then the volume will be 1/4 of the volume of the parent log. Because the radius of the parent log is measurable, its volume is obtainable, and so the volume of any sector may be derived using a factor or ratio of the sector to the circle. As long as a slab of this type is in convenient fractions of the parent log, a factor can be applied directly to the parent volume to obtain the volume of the slab. However, without another measurement, the factor remains as an estimate and is subject to systematic errors. One way is to find the arc of the sector and divide it by the circumference of the parent log. Good judgement gained through practice and experience will reduce these errors to within tolerance.

Finding the volume of a sector slab by applying a factor requires the following steps:

- first derive the average diameter of an end of the parent log, from two measurements of its sector,
- find the unit volume of the end of the parent log,
- apply a factor to find the unit volume of the end of the segment,
- record the radius class unit which is closest to the sector's unit volume,
- repeat the above process for the other end of the slab, and
- record the length of the slab so that a volume may be calculated.

The scaling method to find a radius class representing the unit volume of the quadrant in Figure 6.19 is as follows.

The average diameter of one end of the parent log is derived from the measurements taken of its sector. The formula for determining the average diameter of one end of the parent log from the measurements of its slab sector is:

$$\text{Parent log diameter} = \frac{2A + 2B}{2}$$

Replace the variables A and B with the measurements given. (A = 12 and B = 14).

The unit volume for 26 rads is 212 dm^3. Since this slab is a true quadrant (i.e., 1/4 of the original circular end or 90/360), 1/4 of the parent volume is 53 dm^3.

Finally, the unit volume nearest to that resulting unit volume (53) is located on the scale stick, and the corresponding radius class unit is recorded. In this case, the closest unit volume is the same, which corresponds to 13 rads.

6.3.4 Measuring Slab Sectors and Segments Greater Than a Semicircle

Sectors and segments greater than a semicircle (i.e., sectors or segments which contain more than half of the volume of its "parent" log and contain enough of their outer circumference to permit reliable measurement through the centre of the log), are classed as logs with missing portions, rather than as slabs.

Logs with missing portions are normally scaled by first measuring the diameter of the log and then making a firmwood deduction for the missing portion. The volume of the missing portion is determined in the same way that the volumes of sectors and segments are found. The volume of the missing sector or segment is found by an appropriate method and subtracted from the gross volume of the log to arrive at a net volume. Firmwood deductions are described in *the Firmwood Defects and Conventions* section of this manual.

6.3.5 Measuring Four Sided (plank-like, timber-like) Slab Ends

Although logs rarely break up into truly rectangular or square cross-sections unless a sawmill is involved, slab ends can be more or less four sided and are all scaled in the same manner. Scalers often refer to them as "planks" or "timbers".

Figure 6.20 depicts such slab ends. As suggested in the diagram, the width and thickness measurements are taken so that the voids (areas x) balance the protuberances (areas y). Of the quadrilateral shapes, they can be more or less square, rectangular (plank-like), trapezoid, or rhomboid (timber-like). The measurements are taken in the same way for all of them, through the width and thickness, and at 90 degrees to each other. Shapes which are quite irregular may require more than one measurement on an axis to arrive at an average width or average thickness.

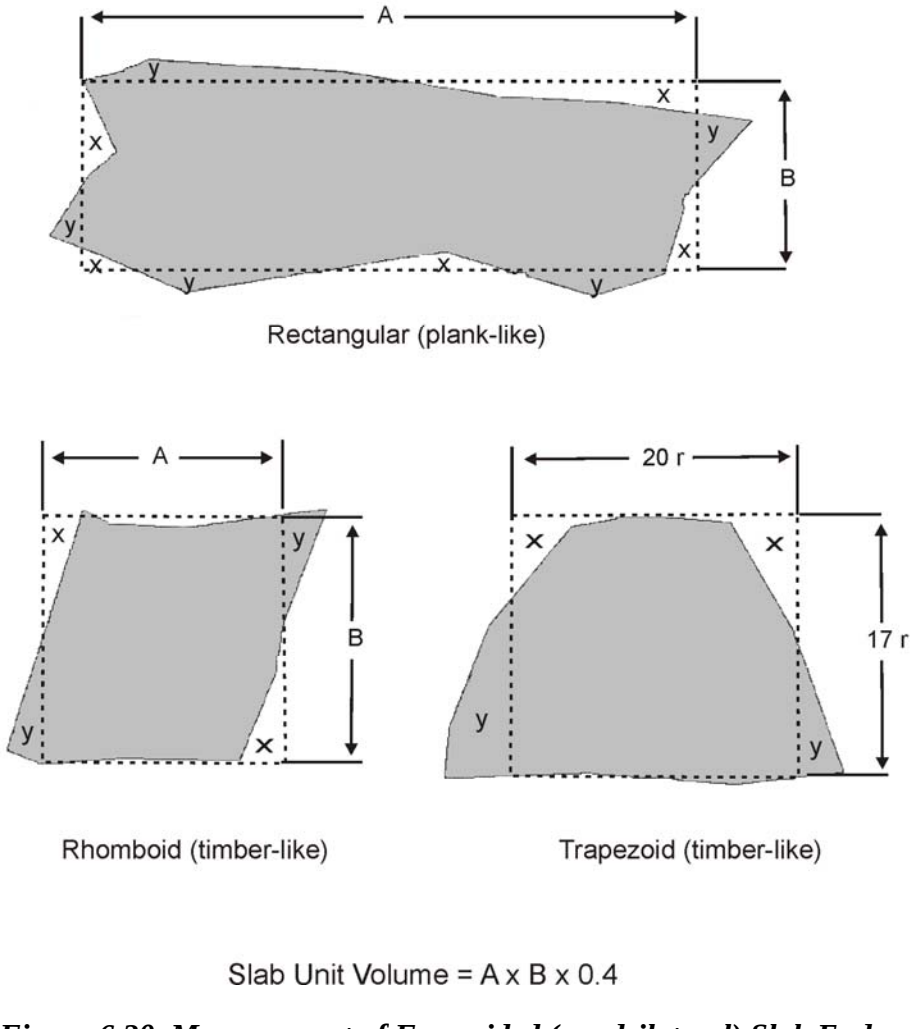

Figure 6.20 Measurement of Four-sided (quadrilateral) Slab Ends.

To find the volume of a four-sided slab it is necessary to:

- first derive a unit volume of an end of the slab, from the two measurements of its width and thickness,
- record an equivalent radius class unit which is close to the unit volume,
- repeat the above process for the other end of the slab, and
- record the length of the slab so that a volume may be calculated.

The scaling method to find a radius class unit representing the unit volume of the slab end in Figure 6.20 is as follows:

The area of a four-sided slab end is its average width times its average thickness. To arrive at an effective radius class, the calculation is different from circular shapes, because, unlike circular shapes, in which two measurements are averaged, the two are multiplied, which produces a different ratio, or factor, of dimension to unit volume. To obtain the unit volume of a rectangular slab end in order to locate an equivalent effective radius on the scale stick, a factor must be applied to the product of the slab's width and thickness in rads to convert to unit volumes (cubic decimetres per metre). This factor, which is constant, simply provides a shorter way of doing the calculation, similar to the way Smalian's formula is shortened. The full formula for finding the unit volume for one end of a rectangular slab is:

$$\text{Four-sided slab Unit volume} = \frac{(\text{Width in Rads x 2}) \text{ x } (\text{Thickness in Rads x 2}) \text{ x } 100}{1000}$$

Multiplication of the two measurements in rads by 2 converts rads to centimetres. Multiplication by 100 gives the volume in cubic centimetres for one metre of length. Division by 1 000 gives the volume in cubic decimetres for one metre, or the unit volume.

By naming the width and thickness of the slab as A and B the formula shortens to:

$$\text{Four-sided slab Unit volume} = \frac{(2A) \text{ x } (2B) \text{ x } 100}{1000}$$

By transposing A and B to combine the constants the formula becomes:

$$\text{Four-sided slab Unit volume} = A \text{ x } B \text{ x } \left(\frac{2 \text{ x } 2 \text{ x } 100}{1000}\right)$$

And by calculating the combined constants, the formula is simplified to:

$$\text{Four-sided slab Unit volume} = A \text{ x } B \text{ x } 0.4$$

Where:

A	=	Width in rads
B	=	Thickness in rads
0.4	=	the constant

By substituting the slab dimensions from the example in Figure 6.20 into the formula,

Rectangular slab Unit volume = 20 x 17 x 0.4

Rectangular slab Unit volume = 136 dm^3

Finally, the unit volume nearest to 136 is located on the scale stick, and the corresponding radius class is recorded. In this case, the closest unit volume is 139, which corresponds to 21 rads. The process is repeated at the other end of the slab.

6.3.6 Measuring Triangular (three sided) Slab Ends

Logs can break into roughly triangular shapes, and although not perfectly shaped, may be enclosed in a triangle for purpose of measurement, similar to four-sided slab shapes.

Figure 6.21 depicts such slab ends. As suggested in the diagram, the width and thickness measurements are taken across the base and height of the triangle, accounting for minor imperfections in the shape. Of the triangular shapes, they can be more or less equilateral, right, or obtuse. The measurements are taken in the same way for all of them, through the base and height, and always at 90 degrees to each other.

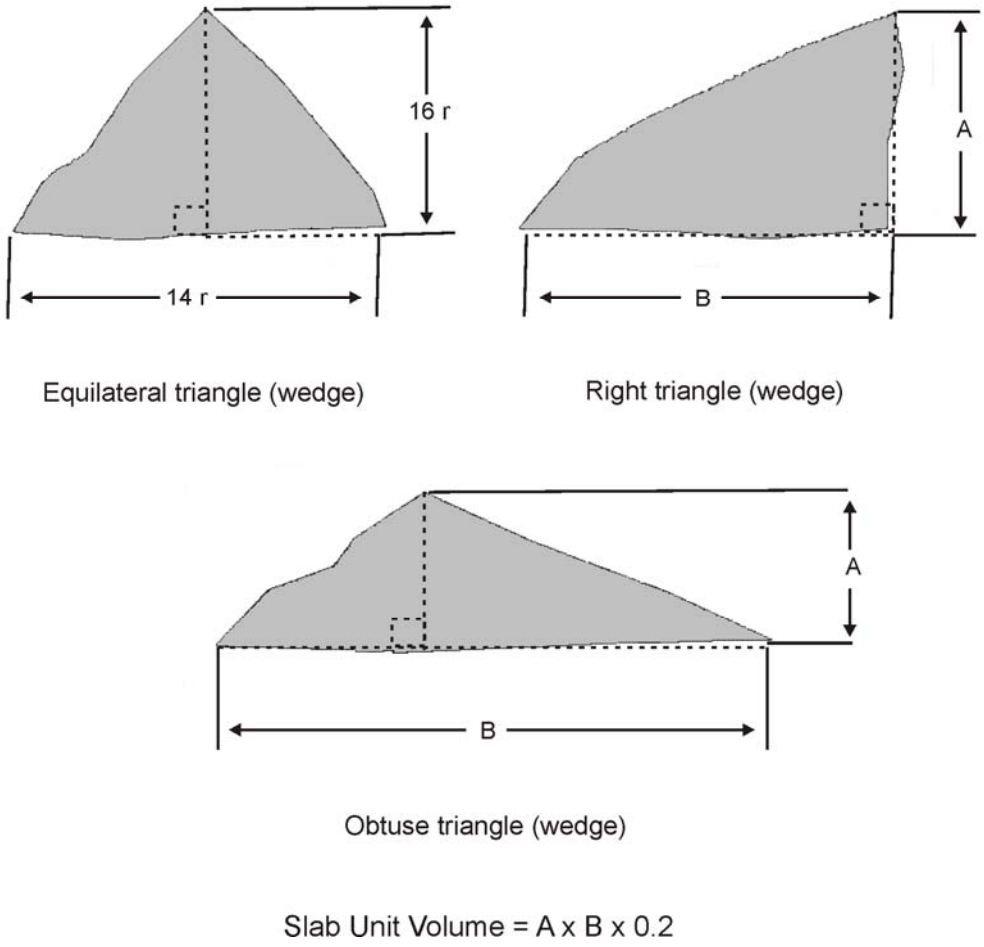

Figure 6.21 Measurement of Triangular or Wedge-shaped Slab Ends.

To find the volume of a triangular slab (wedge) it is necessary to:

- first derive a unit volume of an end of the slab, from the two measurements of its base and height,
- record a corresponding radius class unit which is close to the unit volume,
- repeat the above process for the other end of the slab, and
- record the length of the slab so that a volume may be calculated.

The scaling method to find a radius class representing the unit volume of the slab in Figure 6.21 is:

The area of a triangle is one half its base times its height. To arrive at an effective radius class, the calculation is different from circular shapes, because, unlike circular shapes, in which two measurements are averaged, the one measurement is first halved, then the two are multiplied, giving a different ratio, or factor, of dimension to unit volume. To obtain the unit volume of a triangular slab end in order to find an effective radius class on the scale stick, a factor must be applied to the product of 1/2 of the slab's base and its height in rads to convert to unit volumes (cubic decimetres per metre). This factor, which is constant, simply provides a shorter way of doing the calculation, similar to the way Smalian's formula is shortened. The full formula for finding the unit volume of an end of a triangular slab is:

Multiplication of the two measurements in rads by 2 converts rads to centimetres. Division of the base width by two is a requirement of the formula of the area of a triangle. Multiplication by 100 gives the volume in cubic centimetres for 1 m of length. Division by 1 000 gives the volume in cubic decimetres for 1 m, or the unit volume.

By naming the height and base of the slab as A and B the formula shortens to:

$$\text{Triangular slab Unit volume} = \left(\frac{(\text{height in Rads} \times 2) \times \frac{(\text{Base width in Rads} \times 2)}{2} \times 100}{1000} \right)$$

By transposing A and B to combine the constants the formula becomes:

$$\text{Triangular slab Unit volume} = \frac{(2A) \times \left(\frac{(2B)}{2} \right) \times 100}{1000}$$

$$\text{Triangular slab Unit volume} = A \times B \times \left(\frac{2 \times \left(\frac{2}{2} \right) \times 100}{1000} \right)$$

And by calculating the combined constants, the formula is simplified to:

$$\text{Triangular slab Unit volume} = A \times B \times 0.2$$

Where:

A	=	Height in rads
B	=	Base in rads
0.2	=	the constant

By substituting the slab dimensions from the example in Figure 6.21 into the formula,

$$\text{Triangular slab Unit volume} = 16 \times 14 \times 0.2$$

$$\text{Triangular slab Unit volume} = 44.8\,dm^3$$

Finally, the unit volume nearest to 44.8 is located on the scale stick, and the corresponding radius class is recorded. In this case, the closest unit volume is 45, which corresponds to 12 rads. The process is repeated at the other end of the slab.

This page is intentionally left blank.

Firmwood Defects and Conventions 7

7.1 Firmwood Deductions

While the Gross Measurement Procedures chapter of this manual deals with the more objective concepts of scaling, Firmwood Deductions introduces many subjective concepts.

Objective results are based on fact. That is, it is possible to perform most measurements and record the gross dimensions of a typical log by following standard procedures which do not vary and are quite objective. Firmwood defects, on the other hand, can be subjective or based on ideas and opinions gathered through experience. A reasonable estimation of the affects of internal rots where there are few indications of its presence and no possibility of measurement is quite subjective. Through study, training, observation, and support from the scaling community in both industry and government new scalers will gain enough experience to make judgements which are unbiased and within tolerances. There are two provincially approved methods of deduction:

- Gross/Net method, and
- Net Dimensions method.

7.2 Firmwood Deduction Principles

The following sections discuss the concepts of firmwood deduction and outlines methods for determining the net firmwood content of logs containing defects. For each defect example there is one or more volumetric calculations shown.

The Gross/Net calculation can be thought of as the method a computer would use when presented with the required measurements and shapes. Apart from their inclusion in handheld scaling computer software, these calculations are used when analyzing theoretical logs in a classroom setting, when dealing with particularly challenging or borderline logs or when arithmetic skills are strong. They are expressed in full detail for each defect example.

The field methods are based upon field experience and are provided for when not using a scaling computer. Although the results often approximate those of the gross/net calculations, experience has shown that differences can be significant enough to be of concern. The field methods typically rely on reducing one or more of the gross dimensions of a log so that the recorded net dimensions closely reflect the net firmwood volume.

7.3 Geometric Shapes

The approach taken for determining the net firmwood volume of a log is based on the standard geometric shape as illustrated below that most closely approximates the form of a log and its defect. From careful study of the *Gross Measurements Procedures* chapter it becomes clear that no new volumetric concepts are introduced; the shapes of logs, sectors, segments and slabs described earlier are able to be duplicated in virtually every defect shape by applying the standard shapes alone or in combination with others.

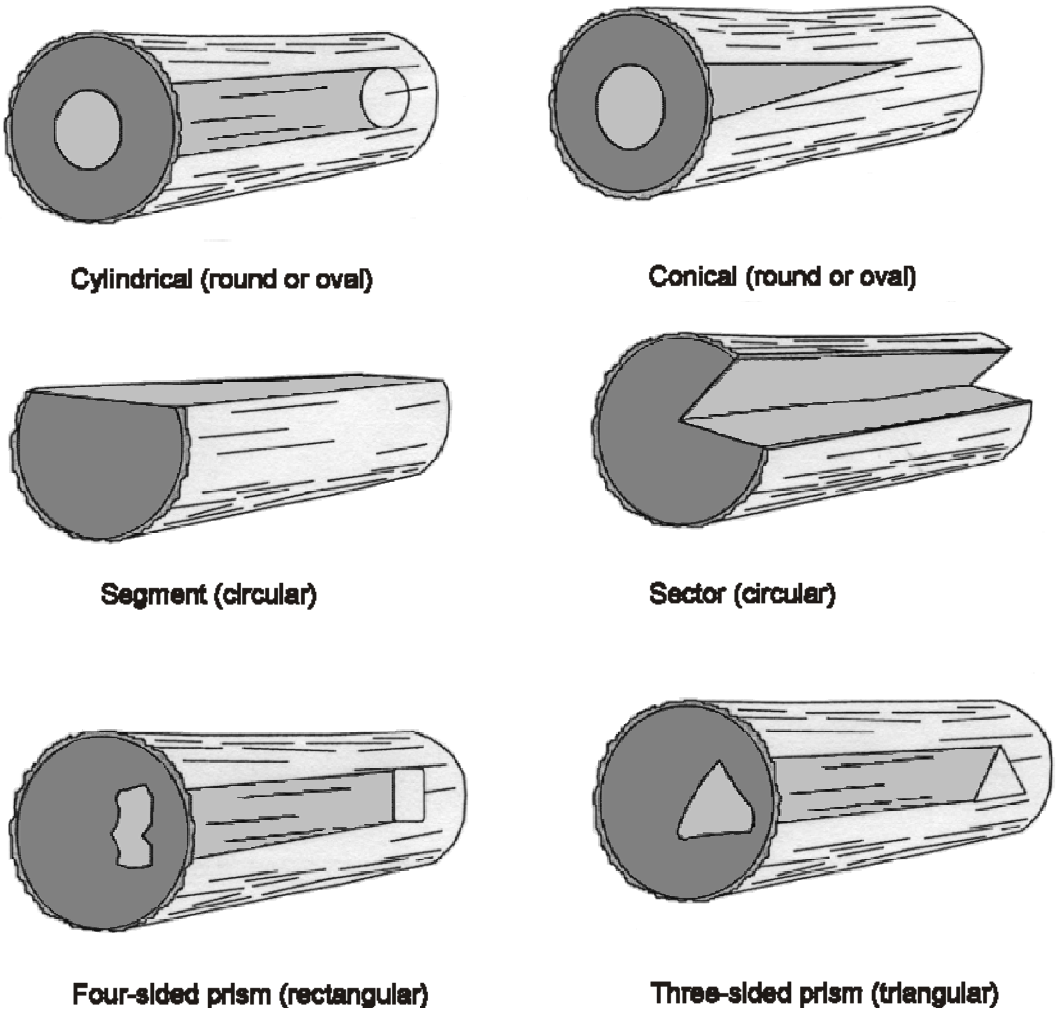

Figure 7.1 The Geometric Shapes Used in Scaling and Firmwood Deductions.

The shapes illustrated in this figure are either round or oval in profile (cylindrical, conical, sectors, segments) or angular (three and four sided prism). The defect deduction formulae are based on four geometric forms; the cylinder, the cone, the four sided (quadrilateral) prism and the three sided (triangular) prism.

7.4 Deduction Methods

The firmwood volume of timber excludes all rot, hole, missing wood, and charred wood. Although the current *Scaling Regulation* does not refer to missing wood as a separate entity from hole, missing wood has been added to scaling terminology to further define a hole. In scaling, a hole is a cavity or opening, such as a knot hole, an advanced heart rot, or an advanced butt rot. Missing wood refers to areas where wood is absent from a log that otherwise would be regarded as complete, such as sniped ends, equipment damage, and burn saddles. Deductions are made from the gross volume of a log for these defects as they occur. A deduction is made by subtracting the volume of the defect(s) from the gross volume of the log.

No firmwood deduction is made for discoloration or stain (incipient decay). Stained wood can be a variety of colours including blue, orange, brown, red or black. It will not have the fleck associated with some varieties of rot. Until sufficient field experience is gained, the scaler may have difficulty determining the difference between stain and genuine rot. In scaling, rot is defined to be that level of decay where wood begins to lose its strength and fibre integrity and rotted fibre may display a variety of shades.

Refer to *Book of Common Tree Diseases in British Columbia* for a more complete discussion of fungal action and tree diseases.

The degree of deterioration is sometimes determined by using the tine of the scale stick, (or spud if so attached), to remove some wood from the suspect area. Test it for strength and fibre integrity by attempting to break and pull it apart with the fingers. If it is sound it should retain the long strands of fibre that hold it together. If it crumbles or comes apart easily it may be rotten. It may be beneficial to remove another sample of wood from a sound area of the log adjacent to the area suspected of being rotten. The two samples can be compared for relative strength and integrity.

No firmwood deduction is made for twist, sweep, crook, checks, stain, large knots or other quality considerations, even though these may indicate a grade consideration. A condition which may be considered a defect in a grade reduction is not necessarily considered to be a firmwood defect in a volume deduction. Firmwood scaling is concerned with determining the volume of sound or firmwood fibre in a log. Timber grading, on the other hand, is concerned with the potential quantity and quality of end product available from that log.

For the purposes of grading, the same formulae and methods described in this chapter may be used to calculate the portion of a log that can be manufactured into an end product (grading is discussed in the following chapter of this manual, *Timber Grading*).

Depending on the tools available to the scaler, two methods may be used as described below:

7.4.1 Gross/Net Method

If using a scaling computer it will produce a detailed log listing showing the gross volumes, defect types, defect volumes, and net firmwood volumes.

To obtain the net volume of a log with defect(s) using a scaling computer, follow these steps:

- enter the dimensions of the log,
- enter the type and required dimensions of the defect(s), and
- compute the net volume.

If not using a computer equipped with scaling software:

- calculate the gross volume of the log,
- calculate the volume of the defect(s), and
- subtract the defect volume from the gross volume to get the net volume of the log.

7.4.2 Net Dimensions Method

The net dimensions method may be used when recording the scale on a paper form and consists of reducing the measured dimensions of the log so that the recorded net dimensions will calculate the correct firmwood volume.

Net dimensions equivalent to net volumes are available to the scaler by calculating:

- a length deduction,
- a diameter deduction, or
- a combination of both.

7.4.2.1 Length Deduction

Although this method requires more arithmetic, length deduction can be used for all defects and can accommodate a smaller defect than the diameter deduction method in smaller diameter and longer logs. To perform a length deduction the scaler must:

- first determine the volume of rot,
- determine the average unit volume of the log then,

- divide the rot volume by the average unit volume of the log to find the required length deduction, and

- subtract the length deduction from the gross log length.

The result is the net length of the log to be recorded.

7.4.2.2 Average Unit Volumes

References to unit volumes (UV) and average unit volumes (AUV) are made in this manual. A unit volume is simply the volume in dm3 of a one metre length of a log with the same diameter at each end. It is directly proportional to the end area, which in dm2 is always 1/10 of the unit volume (or the area times 1 m). Unit volumes are read directly off the scale stick and because of their relation to end area, form the basis of comparison of defect proportion to firmwood proportion in the observation of a log. An average unit volume is the average, for one metre of log length, of the unit volume of each end of a log.

Different terminology is used from region to region when discussing unit volumes, such as the unit volume per metre (UVM), the factor, the one metre unit volume, the two metre half volume or one tenth of the ten metre volume. These terms are derived from regional differences and the various approaches to finding a unit volume or an average unit volume on a scale stick and should not be misinterpreted as something else; they are all in the same unit.

There are two simple ways to derive an average unit volume from the scale stick. Both are commonly used by scalers according to individual preference:

- in the first method, measure both ends of the log. Add the two corresponding unit volumes for the measured ends and divide by 2,

- in the second method, measure both ends of the log. Add the 10 m half volumes corresponding to the log ends and divide by 10, and

- rounding will often result in a difference of 1 dm^3 between the two methods. This difference is of no significance in unit volume calculations.

Please see the Scaling Tools chapter of this manual for information about unit volumes and the scale stick.

The rounding convention relates directly to computing devices and advises that a given number will round up on the exact 0.5. The use of a scale stick for average diameters or average unit volumes, or a tape for length, will round up or down to the nearest even number on the exact 0.5. Scalers must rely on one rounding convention which eliminates the possibility of bias (one up, one down). Although the two conventions appear to be in conflict, computers work in a different domain. For example, a hand held data capture unit is never required to average diameters or lengths. They are first averaged by the scaler, and then entered into the unit.

7.4.2.3 Diameter Deduction or Radius Reduction Method

Diameter deduction or radius reduction as it is often called is the easiest and quickest of the basic deduction procedures for a through running defect or a defect which is estimated to run half way through a log. If a scaler does not consider log length and diameter when making diameter deductions for defects which do not affect the full length or exactly half the length of a log there is a risk of over-deducting. For this reason diameter deductions are limited to defects which travel the full length, or are estimated to travel exactly half the length of the log.

To obtain a net diameter equivalent to the net volume for a log follow these steps:

- measure the diameter of the log at the defect end and obtain the unit volume of that end of the log from the scale stick,
- measure the diameter of the defect and obtain the unit volume of the defect from the scale stick,
- subtract the defect volume from the unit volume of that end of the log to obtain a net unit volume, and
- locate a diameter on the scale stick with a unit volume closest to the net unit volume.

The result is the net diameter in rads or the radius in centimetres to be recorded.

> The gross/net deduction method is preferred as its result is the closest reflection of a log's true net volume.

7.5 Conventions for Estimating Rot

When a defect affects the heart of a log, scalers cannot usually see how far it penetrates its length. If indicators are present rot penetration may be accurately estimated, but where there are none conventions may be employed. Basic conventions are outlined in this section to help the scaler in producing uniform and accurate results when unable to determine the actual size and/or length of the defect(s). In making volume deductions for defect, the scaler must pay close attention to any defect indicators, the ratio of the rot to the end, and the stage of the rot development. Conventions may be developed to suit changing conditions and should be tested regularly to ensure that they are still applicable. Scalers working in a new area should discuss local conditions with an experienced District scaling representative.

Ministry and Industry scalers must work together to ensure a complete and accurate scale and where the Regional Executive Director, District Manager or Forest Officer (scaling) determines that a convention does not apply, that person may order that its use be stopped.

7.5.1 Scaling Conventions versus Local Knowledge

The ultimate objective of scaling is to accurately determine the net firmwood volume and grade of each log scaled. To achieve consistent results and facilitate timely scaling most scaling is conducted with some reliance on the use of conventions. Conventions are based on historic relationships between external log characteristics and their impacts on firmwood content and product recovery.

While scaling conventions help the pace of scaling and help scalers achieve consistency, strict adherence to them fails to recognize that the trees from which logs are cut are often variable because of their inherent genetic blue print, their physical growing conditions and their history. Because of this diversity logs often do not conform to established conventions, therefore strict adherence to some conventions will not always yield the most accurate scale. Conventions must be tested regularly to ensure their continued applicability.

7.6 Formulas and Their Terms

Formulas are expressed in the next section in standard algebraic form. The example below shows the formula that is used to find the area of a rectangle:

Area (A) is equal to the length (L) times the width (W), or

$$A = LW$$

All measurements, excluding length measurements, used in the calculations are in rads. It is important to remember that when measuring the diameter of a circle in rads, the resulting value is equal to the radius in centimetres.

Table 7-1 Chart of Terms Used in Scaling Formulas

Term	Definition
L	Length of log measured in metres.
T	Top or small end diameter of a log measured in rads.
B	Butt or large end diameter of the log measured in rads.
DL	Length of defect measured in metres.
DT	Top or small end diameter of a cylindrical defect measured in rads.
DB	Butt or large end diameter of a cylindrical defect measured in rads.
H	Height of a rectangular or triangular shape measured in rads.
W	Width of a rectangular or triangular shape measured in rads.
DHT	Top height of a rectangular or triangular defect measured in rads.
DWT	Top width of a rectangular or triangular defect measured in rads.
DHB	Butt height of a rectangular or triangular defect measured in rads.
DWB	Butt width of a rectangular or triangular defect measured in rads.
IDT	Inside diameter, top, or small end of a ring defect measured in rads.
IDB	Inside diameter, butt, or large end of a ring defect measured in rads.
ODT	Outside diameter, top, or small end of a ring defect measured in rads.
ODB	Outside diameter, butt, or large end of a ring defect measured in rads.
NDT	Net top or small end diameter of a log measured in rads.
NDB	Net butt or large end diameter of a log measured in rads.
F	Factor of 0.0001570796 (the constant used in shortened Smalian's formula).
UV	One metre unit volume, expressed as dm3/m. A ten metre volume may be divided by 10 to obtain the one (1) metre unit volume.
AUV	The average of the unit volumes of both ends of a log or defect.
V	Volume in cubic metres or cubic decimetres.

7.7 Defect Conventions and Examples

7.7.1 Conical Defects

Measurements for Defect Volume:

- the estimated defect length in metres to the nearest tenth of a metre, and
- the defect diameter visible at log end in rads.

7.7.2 Butt Rot Conventions

Butt logs are usually identified by observing the large end for flare, fluting, and/or felling signs such as an undercut or hinge in hand felled trees, or the characteristic face left by a harvesting machine. It is important not to confuse heart rot and butt rot. Although heart rot may show in a butt cut log, and butt rot may show in a second cut log, the rot can usually be identified by its nature. For example, brown cubical butt rot is recognizable by the way the wood fibres are affected. As its name implies, the rot is brown, crumbly, and breaks easily into cubes. The following basic conventions apply to butt rot:

- Where rot appears only in the large end of a butt log with butt qualities, treat it as butt rot unless other indicators are present, such as conk knots or conk rot.
- Butt rot visible at the butt end only will be assumed to be conical in shape, with the same basal diameter as the visible end section of the rot.
- Conical butt rot that extends the full length of a log may be treated as though it is through running heart rot. However, if the rot diameter at the butt is greater than 1.5 times the rot diameter at the top, the cylinder (Smalian's) formula will tend to over deduct the volume of rot, and averaging the diameters will understate the volume of rot. If bucking is impossible, adjustments are required. There are two ways to do this; if using the cylinder formula, the rot diameter at the butt may be reduced to the difference between the callipered butt diameter and twice the average collar thickness. If averaging the diameters, the result will be closer to true defect volume of the neiloid or "golf tee" shape typical of logs with a high degree of flare. By adding 1 rad to the average, the result will be closer when the defect is a frustum of a cone. The cylinder formula is suitable for rot shapes which are parabolic (bullet shape). Section 7.6.3.1 provides example calculations to demonstrate the two concepts.
- The diameter of butt rot used for deduction calculations must not exceed that of the recorded butt measurement where the actual measurement of butt rot exceeds the line of normal taper. This is a common occurrence in decadent logs with a great deal of butt flare.

There are many factors which affect the distance butt rot runs up from the stump: species, flare, taper, size, and age all contribute. Without indicators to establish rot penetration, it

becomes necessary to estimate the length of the rot. Through decay studies, mill studies, and experience, the following conventions have been found to be reliable in most cases:

- In the British Columbia interior, the average distance which butt rot travels in most logs is approximately 15 times the radius of the rot in centimetres, if there are no indicators to the contrary. For example, if the radius is 25 cm (same as the diameter in rads), 25 x 15 = 375 centimetres, or 3.75 m. The penetration is therefore 3.8 m (rounded).

- In coastal areas of British Columbia, butt rot, butt shake and related butt defects have the length of defect estimate based on the relation between the defect diameter and the recorded butt diameter of the log.

Where rot measures	It often penetrates
1/4 of the recorded butt dia.	1.8 - 2.4 m
1/2 of the recorded butt dia.	3.6 - 4.2 m
3/4 of the recorded butt dia.	5.4 - 6.0 m
4/4 of the recorded butt dia.	7.2 - 7.8 m

These figures may be adjusted slightly up or down depending on the species and visible butt flare. Douglas fir and spruce, having pronounced butt flare may use the lower figure mentioned as butt rot in these species usually does not run far past the flare. In hemlock, balsam, and sometimes red cedar, where butt flare is minimal, rot may run further into the log and a larger estimate is required. These are general guidelines only.

The Forest Service may endorse other conventions which are applicable to regional conditions. All conventions should be reviewed regularly to ensure continued applicability.

7.7.3 Butt Defect - Butt Rot (Conical) Partial Length of Log

This method of calculation is usually used for defects found in and confined to the butt end of a first cut or butt (flared) log. This method may also be used for all defects that have a geometrical shape of a cone or portion of a cone, such as catface.

7.7.3.1 Example and Illustration - Butt Rot Visible at Butt End of Log

Figure 7.2 depicts a typical log harvested from an interior region of British Columbia with conical butt rot measuring 25 rads in diameter and estimated to penetrate 15 times the radius, or 3.8 m.

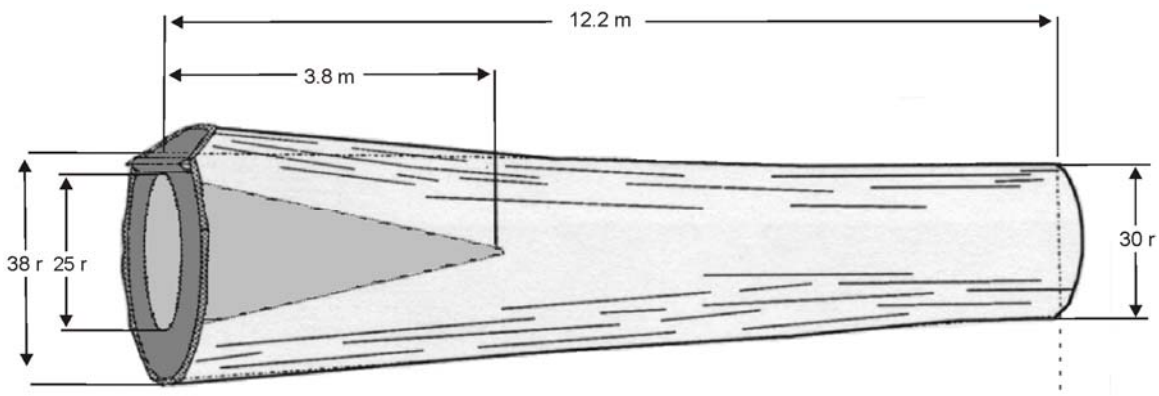

Figure 7.2 A Log with Butt Rot – One End Visible.

7.7.3.1 The Gross/Net Calculation- Butt Rot

The formula that is used to find the volume of a conical defect is expressed as follows, where the volume of a cone is one third of the volume of a cylinder with the same basal diameter:

$$V = \frac{\left(DB^2 + DB^2\right) \text{ x DL x F}}{3}$$

The complete formula for finding the net volume of a log with a conical defect is expressed as follows, where the volume of the cone of defect is subtracted from the volume of the cylinder of firm wood:

$$V = \left[\left(T^2 + B^2\right) x L x F\right] - \left[\frac{\left(DB^2 + DB^2\right) x DL x F}{3}\right]$$

Where the following values are substituted for the variables:

T = 30 rads,

B = 38 rads,

L = 12.2 m,

F = 0.0001570796,

DB = 25 rads,

DL = 3.8 m,

$$V = \left[\left(30^2 + 38^2\right)x12.2x0.0001570796\right] - \left[\frac{\left(25^2 x 25^2\right)x3.8x0.0001570796}{3}\right],$$

$$V = \left[2344x12.2x0.0001570796\right] - \left[\frac{1250x3.8x0.0001570796}{3}\right],$$

$$V = 4.492 - 0.249,$$

$$V = 4.243\ m^3.$$

7.7.3.2 The Net Dimensions Calculation – Butt Rot

Using the net method of the defect deduction with the cone formula, the log is calculated as follows:

Average unit volume of 30/38	=	368 dm^3 (AUV)
Defect volume 3.8/25	=	745 dm^3 divided by 3
Total defect volume	=	249 dm^3

Rot volume:	249	=	0.677 m length deduction
AUV:	368		

12.2 – 0.7 = 11.5 m Net length

Record the net dimensions 11.5 30/38

Net Volume – 4.234 m^3

7.7.3.3 Example and Illustration - Butt Rot Visible at Both Ends of Log

Measurements for Defect Volume:

- the defect length in metres to the nearest tenth of a metre (the same as the measured log length), and
- both defect end diameters in rads.

Figure 7.3 depicts a typical log with conical butt rot measuring 30 rads and 6 rads in diameter and penetrating the full length of the log. Because the rot diameter at the butt is more than 1.5 times the rot diameter at the top, and the shape is the frustum of a cone,

(30/6 = 5 times), an overstatement of the defect volume will result from summing the half volumes or from finding the average unit volume, and an understatement of the defect volume will result from averaging the diameters. It is possible to arrive at the volume of rot using a formula for the frustum of a cone in these cases.

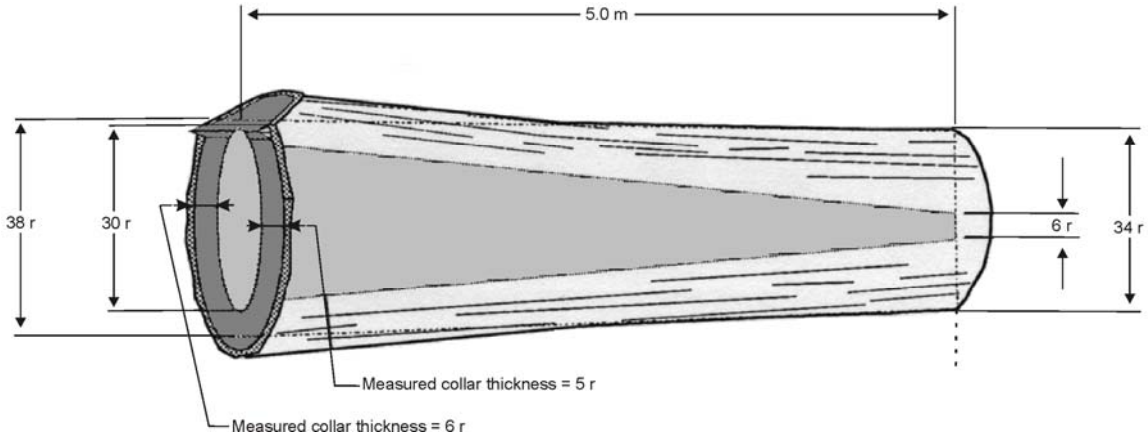

Figure 7.3 A Log with Butt Rot – Through Running.

7.7.3.3.1 Calculations - Butt Rot Visible at Both Ends of Log

It is the general convention to treat butt defect as conical, and in many geographical areas, no other treatment is used. However, experience with certain species and growth conditions may indicate that a neiloid (golf tee) shape or a parabolic (bullet) shape is valid. See Section 4.2 for an explanation of log and rot shapes. In these cases, different field approaches may be used for through running defects with extreme taper. The ability to use the following methods is governed by local conditions:

1. If the shape is assumed to be neiloid, average the diameters.

2. If the shape is assumed to be parabolic, use the average of the end areas.

When conical butt rot projects through to the top end of a log it becomes a frustum of a cone.

Method 1 shows the Gross/Net calculation that is used with a scaling computer using the formula for the shape of a frustum of a cone.

For Net Dimensions scale, if the shape is assumed to be the frustum of a cone, use Method 2 or Method 3 of the following.

Method 1 Gross/Net Deduction - Through Running Butt Rot

This is the method that a scaling computer would use for finding the net volume of a log with a defect in the shape of a frustum of a cone:

$$V = \left[\left[T^2 + B^2\right] x L x F\right] - \left[\frac{\left[\left[DT^2 + DB^2 + (DT \, x \, DB)\right] x DL x F\right] x 2}{3}\right]$$

Where the following values are substituted for the variables:

T = 34 rads,

B = 38 rads,

L = 5.0 m,

F = 0.0001570796,

DT = 06 rads,

DB = 30 rads,

DL = 5.0 m,

$$V = \left[\left(34^2 + 38^2\right) x 5.0 x 0.0001570796\right] - \left[\frac{\left[\left(06^2 + 30^2\right) + \left(06 \, x \, 30\right)\right] x \, 5.0 \, x \, 0.0001570796 \, x \, 2}{3}\right]$$

$$V = \left[2600 x 5.0 x 0.0001570796\right] - \left[\frac{1116 x 5.0 x 0.0001570796 x 2}{3}\right]$$

$V = 2.042 - 0.584,$

$V = 1.458 \text{ m}^3.$

Method 2 Net Dimensions Calculation – Through Running Butt Rot

Determine the difference between the callipered butt diameter and twice the average collar thickness to obtain a reduced rot diameter at the butt (collar measurements are required at the butt to determine average collar thickness).

AUV of 34/38	=	408 dm^3
Callipered butt diameter	=	38 rads
(Measured rot diameter	=	30 rads)
Average collar thicknesses	=	$\frac{5+6}{2}$ = 5.5 rads
Twice av. collar thickness	=	5.5 x 2 = 11 rads
Reduced butt rot diameter	=	38 – 11 = 27 rads

Defect volume:

Half volume of 5.0/06	=	28 dm^3
Half volume of 5.0/27	=	+ 573 dm^3
Full volume of 5.0/06/27	=	601 dm^3

Defect volume:

Defect Volume: 601 AUV: 408	=	1.47 m Length deduction
5.0 – 1.5	=	3.5 m Net length
Net dimensions		3.5 34/38

Net Volume – 1.430 m^3

Method 3 Net Calculation – Through Running Butt Rot

In this example average the top and butt defect diameters. But because the rot is conic and taper is extreme, add 2 rads to the average of the defect diameters. For example, where the defect diameter at the butt exceeds the defect diameter at the top by:

< = 1.5 times, use the average

> 1.5 times and = < 2 times, use the average plus 1 rad

≥ 2 times, use the average plus 2 rads.

Average defect diameter = $\frac{6+30}{2} = 18$ rads

Adjusted defect diameter = 18 + 2 = 20 rads

Defect volume:

Half volume of 5.0/20 = 314 dm^3

Half volume of 5.0/20 = + 314 dm^3

Full volume of 5.0/20/20 = 628 dm^3

Average Unit Volume of 34/38 = 408 dm^3

Defect volume: 628
AUV: 408 = 1.53 m Length deduction

Net dimensions 3.5 34/38

Net volume – 1.430 m^3

7.7.4 The Catface (Conical)

Measurements for Defect Volume:

- the defect length in metres to the nearest tenth of a metre, and
- the width and height (big end) of the defect in rads.

7.7.4.1 Example and Illustration - Single Catface

In the example illustrated below, a portion of the tree's circumference has been scarred. As a result, it does not form a cylinder for part of its length. Where the catface tapers out as illustrated, the defect approximates the shape of a segment of a cone.

This log is 7 m long with a 20 rad top and a 24 rad butt. The conical catface is 4.8 m long and is 18 rads wide by 10 rads deep at the butt face.

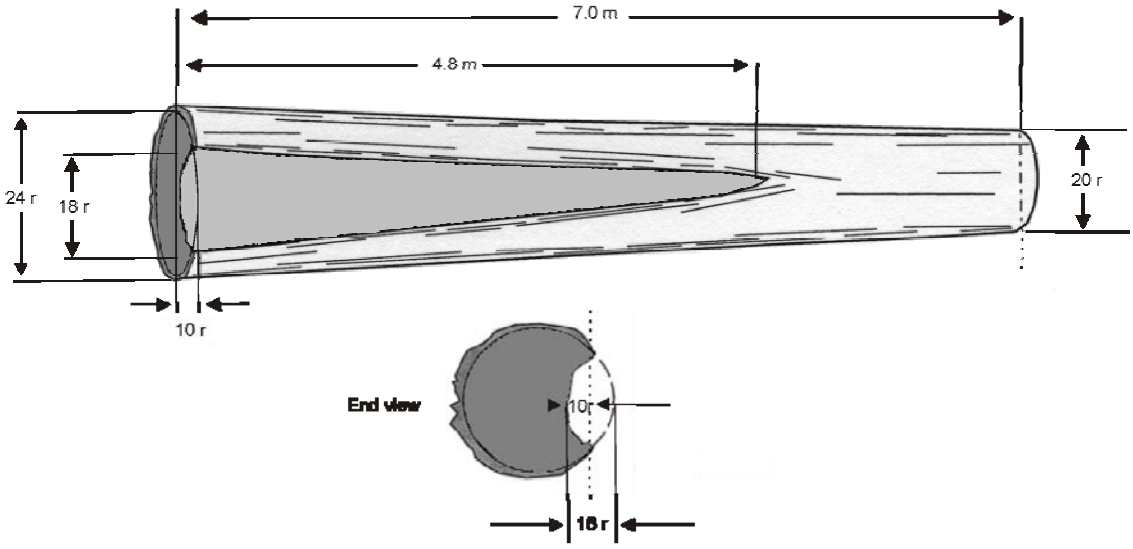

Figure 7.4 A Log with Conical Catface.

7.7.4.2 The Gross/Net Calculation – Single Catface

Using the formula for finding the net volume of a log with a conical defect:

$$V = \left[\left(T^2 + B^2\right) x L x F\right] - \left[\frac{\left(DB^2 + DB^2\right) x DL x F}{3}\right]$$

Where the following values are substituted for the variables:

T = 20 rads,

B = 24 rads,

L = 7 m,

F = 0.0001570796,

DB = 14 rads,

DL = 4.8 m,

$$V = \left[\left(20^2+24^2\right)x7.0x0.0001570796\right]-\left[\frac{\left(14^2+14^2\right)x4.8x0.0001570796}{3}\right]$$

$$V = \left[976x7.0x0.0001570796\right]-\left[\frac{392x4.8x0.0001570796}{3}\right],$$

$$V = 1.073-\frac{0.295561}{3},$$

V = 1.073 – 0.099,

V = 0.974 m^3 net volume

7.7.4.3 Net Dimensions Calculation - Single Catface

Using the cone deduction formula the net volume of the log is calculated as follows:

Calculate an end defect measurement in rads by dividing the sum of the width and height by 2.

$$\frac{10 + 18}{2} = 14 \text{ rads}$$

Calculate the defect volume by first looking up the half volume for 4.8 m 14 rads.

Half volume of 4.0/14	=	123 dm^3
Half volume of 0.8/14	=	+ 25 dm^3
Half volume of 4.8/14	=	148 dm^3

Next calculate the full volume by multiplying the half volume by two.

148 x 2	=	296 dm^3

Finally calculate the volume of the cone by dividing the cylinder volume by three.

$\frac{296}{3}$	=	99
Defect volume	=	99 dm^3

Divide the defect volume by the AUV to calculate the length deduction.

Defect volume:	99	=	0.645 m Length deduction
AUV:	153.5		

7.0 – 0.6 = 6.4 m Net length

Net dimensions 6.4 20/24

Net volume – 0.981 m^3

7.7.5 The Catface (Double Conical)

Measurements for Defect Volume:

- the defect length in metres to the nearest tenth of a metre, and
- the width and height at the largest point (usually near the middle) of the defect in rads.

7.7.5.1 Example and Illustration - Double Catface

In Figure 7.5 a full double conical catface affects a 7 m log. A portion of the tree's stem has been scarred and does not form a cylinder for part of its length. Where the catface tapers out on both ends as illustrated, the defect approximates the shape of two cones attached at the base.

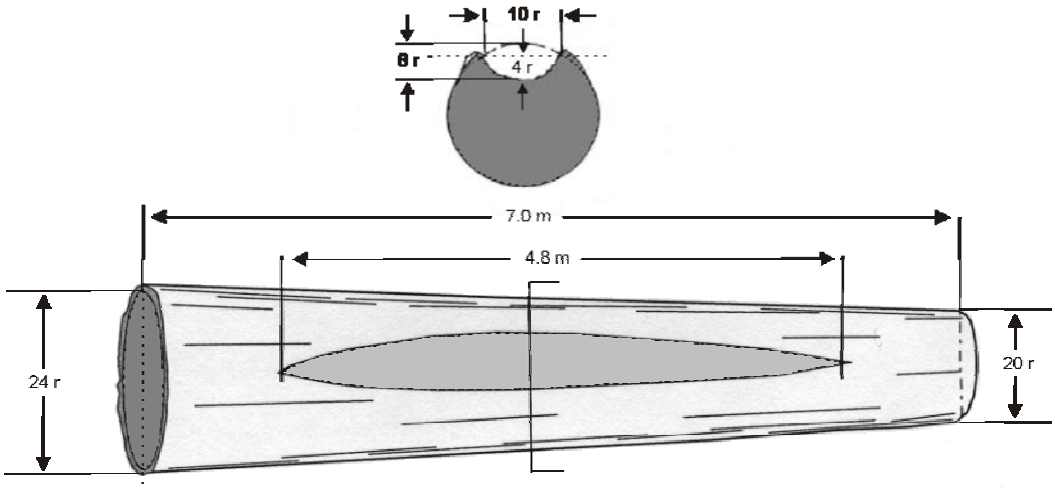

Figure 7.5 A Log with a Double Conical Catface.

7.7.5.2 The Gross/Net Calculation – Double Catface

Using the formula for finding the net volume of a log with a conical defect:

$$V = \left[\left(T^2 + B^2\right)xLxF\right] - \left[\frac{\left(DB^2 + DB^2\right)xDLxF}{3}\right]$$

Where the following values are substituted for the variables:

T = 20 rads,

B = 24 rads,

L = 7 m,

F = 0.0001570796,

DB = 9 rads,

$DL = 4.8$ m,

$$V = \left[\left(20^2+24^2\right)x7.0x0.0001570796\right] \quad \frac{\left(9^2+9^2\right)x4.8x0.0001570796}{3},$$

$$V = \left[976x7.0x0.0001570796\right] \quad \frac{162x4.8x0.0001570796}{3},$$

$$V = 1.07317 \quad \frac{0.122}{3},$$

$$V = 1.07317 - 0.041,$$

$V = 1.032$ m^3 net volume

7.7.5.3 Net Dimensions Calculation - Double Catface

Using the cone deduction formula the net volume of the log is calculated as follows:

Calculate a centre defect measurement in rads by dividing the sum of the width and height by two.

$$\frac{8 + 10}{2} = 9 \text{ rads}$$

Calculate the defect volume by looking up the half volume for the length of the defect, or 4.8 m and 9 rads.

Half volume of 4.8/09 = 61 dm^3

Full volume of 4.8/09/09 = 122 dm^3 (2 x half volume)

Volume of cone 4.8/09 = $\frac{122}{3}$ = 41 dm^3

Defect volume: $\frac{41}{153.5}$ = 0.267 m Length deduction

AUV:

7.0 – 0.3 = 6.7 m Net length

Net dimensions – 6.7 20/24

Net Volume – 1.027 m^3

7.7.6 Standard Heart Rot Conventions

Whereas the *Species Identification and Defects* chapter of this manual provides a general view of rot fungi, the following sections describe the treatment of rots in making firmwood deductions. The *Timber Grading* chapter gives instruction on the treatment of heart rots for grading purposes.

- Decayed heart wood may be visible at one or both ends of a log and will usually be circular or semicircular in shape. Its presence may only be indicated by rotten knots, or "conk."

- If heart rot appearing at the end of a log is scattered or sporadic in nature, the cylinder of rot must be reduced in diameter to accommodate the firmwood scattered within the rot.

7.7.6.1 Cylindrical Defects

This method of calculation can be used for defects that have the geometrical shape of a cylinder.

This formula or combinations of this formula can be used for calculating volumes of the following defects: through running heart defect, heart defect running partial length of a log, conk defect, sapwood defect, dead side, missing wood, ring defect, ring shake, outside checks and portions of collars.

7.7.6.1.1 Heart Rot Visible at Both Ends

1. If rot is visible at both ends of the log, scale out the cylinder of rot as if it were a log inside the first log. The volume of the inner cylinder is the volume of the rot.

2. If rot is visible at both ends of a short log, they may be presumed to be connected unless there are indications to the contrary. For example, if a different species of rot shows at each end of the log they may not be connected.

7.7.6.1.2 Example and Illustration - Heart Rot, Full Length

Measurements for Defect Volume:

- the defect length in metres to the nearest tenth of a metre, (the same as the measured log length), and

- both defect end diameters in rads.

Heart rot extends completely through the log in Figure 7.6 and is measurable at both ends. The gross volume of this log is 0.763 m3

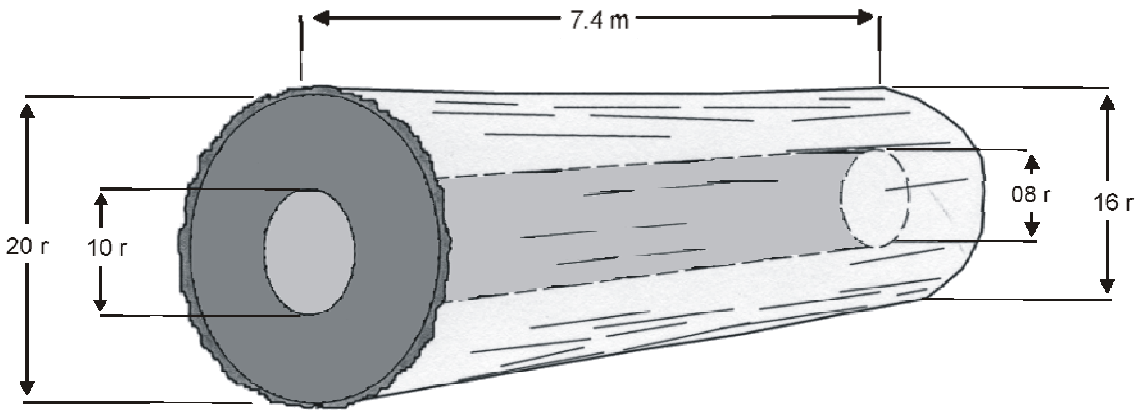

Figure 7.6 A Log with Through-running Heart Rot.

7.7.6.1.3 The Gross/Net Calculation – Heart Rot, Full Length

Using the formula for finding the net volume of a log with a cylindrical defect which projects through a log:

$$V = \left[\left(T^2 + B^2\right)xLxF\right] - \left[\left(DT^2 + DB^2\right)xDLxF\right]$$

Where the following values are substituted for the variables:

T = 16 rads,

B = 20 rads,

L = 7.4 m,

F = 0.0001570796,

DT = 8 rads,

DB = 10 rads,

DL = 7.4 m,

$$V = \left[\left(16^2 + 20^2\right)x7.4x0.0001570796\right] - \left[\left(8^2 + 10^2\right)x7.4x0.0001570796\right],$$

$$V = \left[656x7.4x0.0001570796\right] - \left[164x7.4x0.0001570796\right],$$

$$V = 0.763 - 0.191 = 0.572\ m^3$$

7.7.6.1.4 Net Dimensions Calculation - Heart Rot, Full Length

Using the cylinder deduction formula the net volume of the log is calculated as follows:

Average Unit Volume of 16/20 = 103 dm^3

With the scale stick, look up the volume of a cylinder of the diameter and length of the defect by adding the:

Top defect half volume:

Half volume of 7.4/08 = 74 dm^3

To the butt defect half volume:

Half volume of 7.4/10 = 116 dm^3

Full defect volume of 7.4/08/10 = (74 + 116) = 190 dm^3

$$\text{Defect volume: } \frac{190}{103} = 1.844 \text{ m Length deduction}$$

AUV: 103

7.4 – 1.8 = 5.6 m Net length

Net Dimensions – 5.6 16/20

Net Volume – 0.577 m^3

7.7.6.1.5 Net Dimensions Calculation – Diameter or Radius Reduction – Heart Rot, Full Length

Using unit volumes off the scale stick, find the unit volume for the top end measurement and subtract the unit volume of the defect.

Unit volume, top (16 r)	=	80 dm^3
Less the unit volume, top defect (8 r)	=	-20 dm^3
Net unit volume	=	60 dm^3

Find the rad class corresponding closest to the unit volume of 60 dm^3, which is 14 rads.

Calculate the unit volume for the butt end measurement and subtract the unit volume of the butt end defect.

Unit volume Butt (20 r)	=	126 dm^3
Less unit volume Butt defect (10 r)	=	- 31.dm^3
Net unit volume		95 dm^3

Find the rad class corresponding closest to the unit volume of 95 dm^3, which is 17 rads.

Net Dimensions – 7.4 14/17

Net Volume – 0.564 m^3

Use the diameter or radius deduction method only if heart defect or hole runs the full length or exactly half the length of the log.

7.7.6.2 Heart Defect – Conventions - Partial Length

1. Heart rot, pocket rot, ring rot, and similar defects when showing in only one end of the log are presumed to run half the length of the log to a maximum of 6 metres (coast), and 4 metres (interior) unless there is evidence to the contrary. In all cases, good judgement must be used and local experience is gained by observation of the bucking and manufacturing process. If it can be demonstrated to the local Forest Service staff through proper studies that the defect effectively runs halfway to a maximum of 4 metres (interior) or 6 metres (coast), then it will be assured that the scale data provided will be more accurate.

2. In heart defects with only one end visible, the diameter of the defect at the unseen end is assumed to be the same as at the measured end where the defect penetrates 1/2 way or less. However, in logs where the rot penetrates more than 1/2 the length of the log, this assumption is less reasonable, and the Forest Service may order that logs be bucked prior to scaling to improve accuracy. The ratio of the area of the rot to the area of the end which the rot occurs must be maintained at the unseen end or an over-deduction will result.

A convention should be reviewed at regular intervals to ensure that is applicable and not outdated. If it can be demonstrated through a study that the rot does in effect, run halfway to a maximum of 4 metres (interior) or 6 metres (coast), then this convention may be used. This study must be conducted in a way that is acceptable to the Regional Executive Director, District Manager, or Forest Officer (scaling). This will ensure that the scale data provided will be more accurate and complete.

7.7.6.2.1 Example and Illustration - Heart Rot, Partial Length

Measurements for Defect Volume:

- the estimated defect length in metres to the nearest tenth of a metre, and
- the defect diameter visible at the log end in rads.

The heart rot visible at the butt end of the log shown in Figure 7.7 is estimated to travel 2.7 m and the diameter of the rot is assumed to be the same at both ends (10 rads).

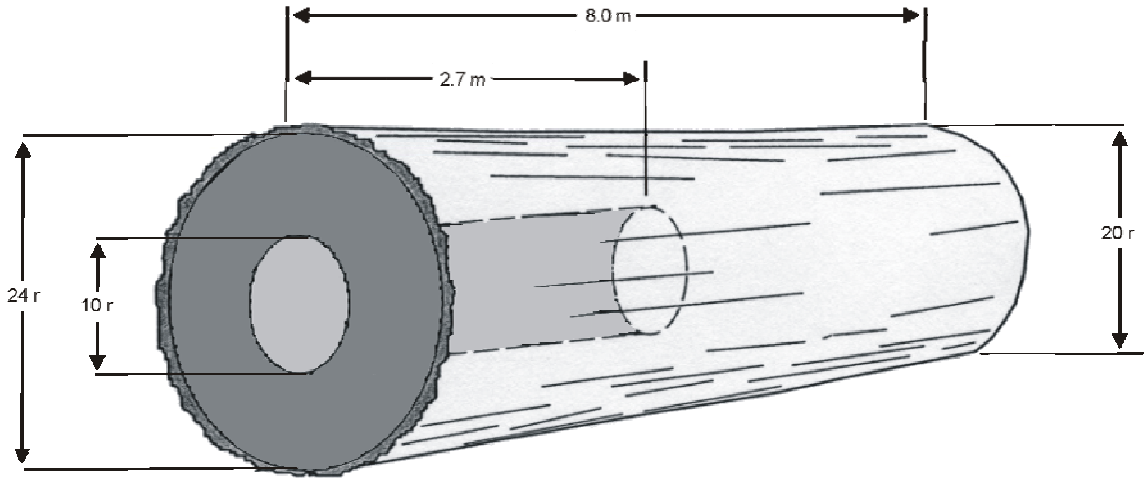

Figure 7.7 A Log with Partial Length Heart Rot.

7.7.6.2.2 The Gross/Net Calculation – Heart Rot, Partial Length

Using the cylinder formula for finding the net volume of this example which has a defect which does not project completely through the log:

$$V = \left[\left(T^2 + B^2\right)xLxF\right] - \left[\left(DT^2 + DT^2\right)xDLxF\right]$$

Where the following values are substituted for the variables:

T = 20 rads,

B = 24 rads,

L = 8.0 m,

F = 0.0001570796,

DT = 10 rads,

DL = 2.7 m,

$V = \left[\left(20^2 + 24^2\right)x8.0x0.0001570796\right] - \left[\left(10^2 + 10^2\right)x2.70x0.0001570796\right]$

$V = \left[976x8.0x0.0001570796\right] - \left[200x2.7x0.0001570796\right]$,

V = 1.227 – 0.085,

V = 1.142 m^3.

7.7.6.2.3 Net Dimensions Calculation - Heart Rot, Partial Length

Using the cylinder deduction formula the net volume of the log is calculated as follows:

Average Unit Volume of 20/24 = 153.5 dm^3

Defect volume

Half volume 2.7/10 = 42 dm^3

Full volume of 2.7/10/10 = 84 dm^3 (2 x the half volume)

Defect volume: 84 = 0.547 m Length deduction

AUV: 153.5

8.0 – 0.6 = 7.4 m – Net length

Net Dimensions – 7.4 20/24

Net Volume – 1.135 m^3

7.7.7 Assessing Conk, Indian Paint Fungus and Pin Rot

While "conk" is the name used for the mushroom-like fruiting body often seen on standing timber which indicates a fungal invasion of a tree, for scaling purposes conk refers to the types of rot which attack lignin (the glue) and leaves cellulose fibre more or

less intact. In the early stages the wood is only stained purple or light red and requires no firmwood deduction. In later stages, the wood breaks down to form a honeycomb appearance, identifiable at the end of a log by the white, yellow, orange or brown "fleck"(sometimes called "peck" and "white pocket") that distinguishes all conk rots.

During logging operations the external conk indicators are usually knocked off, leaving brown, yellowish brown, and/or orange powdery residues at the entry points. These residues are what a scaler looks for in assessing a log, because their presence indicates a very high probability of extensive conk rot. Conk knots should not be confused with rotten branch stubs, which may not indicate the presence of heart rot. Observation of the ends of logs, where they have been bucked through rotten knots, will indicate the differences in appearance.

If rot does not show at either end of the log but its presence is indicated by conk knots, the challenge is to make a reasonable determination of its range, based only on its indicators. The indicators and the assessment of them are described in the following section on conk rots. For more information on these types of rot please refer to the Book of Common Tree Diseases in British Columbia.

7.7.7.1 Basic Conk Assessments

Because of the variability of the affects of conk, not only by conk species, but by the tree species and location around the province, it is very difficult to establish with conviction any conventions which will have universal application. Mill visits and experience are essential for a scaler to learn to interpret the meaning of conk indicators. In general:

1. Conk can appear in several ways on logs and the estimates for making firmwood deductions and grading are affected by the indicators present. The location of conk knots and the diameter of rot on log ends may be used to estimate the distance that rot travels. That is, the observation of these relationships will help indicate whether the rot is getting worse down the log or "running out".

2. When conk stain or conk rot shows in log end(s) carefully look for conks on the log. Use the tine of the scale stick or a spud to dig into swollen spots, punk knots, and black knots. Size of conks is sometimes helpful in determining the extent of rot in some species.

3. Where there are two or more indications of conk, they are normally presumed to be connected. It is recommended that the scaler have the log bucked to ascertain whether the conk rot has entered the heart of the log or is restricted to the knot.

4. If, among the enclosed rot, there is a substantial amount of firm wood that can be recovered in chips, then the defect diameter should be reduced proportionately for the firmwood volume determination.

5. In logs where conk shows in one or more knots and only a small amount of rot is present in the log end, that rot may not be representative of the severity of the defect.

In that case the firmwood deduction may be increased to one half the length that the conk is estimated to extend.

6. Where very large and/or numerous conks are present, an additional deduction may be required to compensate for the "funnel" affect of the path of rot from the outside of the tree into the central cylinder of rot.

7.7.7.2 Assessing Conk Rot; Visible Conk Knot(s), No Rot Visible

If the scaler observes conk knots but no rot shows at the ends of a log, the following conventions are commonly used:

1. Conk rot generally extends further down from a conk knot than up. Experience has shown that, in coastal regions of British Columbia, given no other indicators to the contrary, it may be presumed that the conk rot extends 2.4 m above the highest conk knot and 3.6 m below the lowest conk knot. In the interior regions of British Columbia, with different timber types, conk rot extends, on the average, 1 m above the highest conk knot and 2 m below the lowest conk knot. Where a conk knot is located closer to the top end or closer to the butt end than the above conventions, presume that the defect will travel one half the distance between the last knot and the log end.

2. When a conk knot is the only indication of conk and the severity of the rot is unknown, the firmwood deduction is calculated as one half the estimated length of the defect in coastal regions, and in interior regions, the diameter of the rot is assumed to be one-half the average diameter of the log for the full length of the defect.

3. Where there are conk knots and no sign of rot at the ends of a log, the scaler should, if possible, have the log bucked and/or observe the processing of the log to get a better idea of the internal affects of conks in their area.

7.7.7.3 Assessing Conk Rot; Visible Conk Knot(s), Rot Visible at One End

If a scaler observes one or more conk knots and conk rot showing in one end of a log, the following guides will serve in the assessment of the log:

1. Where conk shows in the top end of a log and there are conk knots, the rot may be run the greater distance of half the log length to a maximum of (6 m coast/4 m interior), or (3.6 m coast/2 m interior) below the last conk knot. If the last conk knot is closer to the butt end than (3.6 m coast/2 m interior), it may then be presumed to travel one-half the distance between the knot and the butt end.

2. Where conk shows in the butt end of a log and there are conk knots, the rot should be run the greater distance of half the log length to a maximum of (6 m coast/4 m interior), or (2.4 m coast/1 m interior) above the last conk knot. If the last conk knot is closer to the top end than (2.4 m coast/1 m interior), it may then be presumed to travel one-half the distance between the knot and the top end.

3. Where conk rot is visible in the butt end of a butt cut log, and there are conk knots present, the rot is treated as conk rot, not butt rot. Therefore, it is scaled as a cylinder extending from the butt end, rather than as a cone.

7.7.7.4 Assessing Conk Rot; No Visible Conk Knot(s), Rot Visible at One End

1. Where conk rot is visible in one end of a log and there are no conk knots present, the rot is presumed to travel half the length of the log to a maximum of 6 m in coastal regions and 4 m in interior regions.

7.7.8 Ring Defect

7.7.8.1 Ring Rot Conventions

Ring rot often does not form a complete circle. The volume should be calculated as if it was a full circle, and then a factor of the circumference of the ring divided by the full circle is applied to obtain the true volume. That is, if the ring travels approximately two thirds of the way around its circumference, the "unit volume" or factor of the ring area is also two thirds of what a full circle of rot would be.

If there is more than one ring of rot, the firmwood deduction is taken progressively, from the outside rings to the inside rings.

When estimating the distance that ring rot travels down a log, use the same conventions as used in the heart rots, or conk rot, if there is evidence of conk.

7.7.8.2 Ring Defect - Through Running

The simplest method of determining the volume of a ring which does not form a full circle is to:

1. Apply the methods described below as if it were a full circle.

2. Estimate the arc of the rot as a percentage of the full circle.

3. Apply this percentage factor to the full circle.

Measurements for Defect Volume:

- the defect length in metres to the nearest tenth of a metre.

- the outside diameter of the ring defect at the top end in rads and the inside diameter of the ring defect at the top end in rads, and

- the outside diameter of the ring defect at the butt end in rads, and the inside diameter of the ring defect at the butt end in rads.

7.7.8.2.1 Example and Illustration - Ring Rot, Full Length

In the example illustrated in Figure 7.8 a fungus has caused a ring shaped rot to destroy the wood fibres for the full length of the log. The rot volume may be visualised as a cylinder of rot containing another, smaller, cylinder of firm wood that is subtracted from the rot cylinder, leaving the volume of the ring.

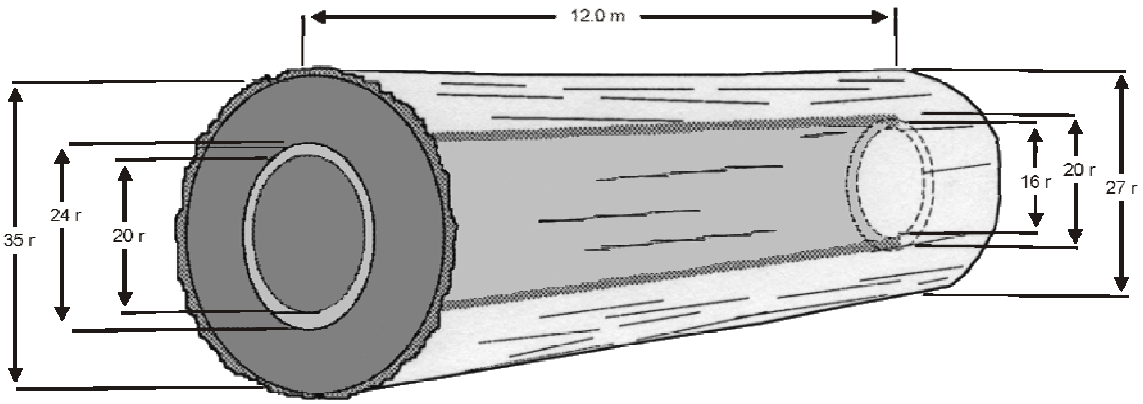

Figure 7.8 A Log with Through-running Ring Rot.

7.7.8.2.2 The Gross/Net Calculation – Ring Rot, Full Length

Using the formula used for finding the net volume of a log with a ring defect which projects through a log:

$$V = \left[\left(T^2 + B^2\right)xLxF\right] - \left[\left[\left(ODT^2 + ODB^2\right)xDLxF\right] - \left[\left(IDT^2 + IDB^2\right)xDLxF\right]\right]$$

Where the following values are substituted for the variables:

T = 27 rads,

B = 35 rads,

L = 12 m,

F = 0.0001570796,

ODT = 20 rads,

ODB = 24 rads,

IDT = 16 rads,

IDB = 20 rads,

$DL = 12$ m,

$$V = \left[\left(27^2 + 35^2\right)x12.0xF\right] - \left[\left[\left(20^2 + 24^2\right)x12.0xF\right] - \left[\left(16^2 + 20^2\right)x12.0xF\right]\right]$$

$$V = \left[1954x12.0x0.0001570796\right] - \left[\left[976x12.0x0.0001570796\right] - \left[656x12.0x0.0001570796\right]\right]$$

$$V = 3.683 - \left[1.840 - 1.237\right]$$

$$V = 3.683 - 0.603,$$

$$V = 3.080 \text{ m}^3.$$

7.7.8.2.3 Net Dimensions Calculation - Ring Rot, Full Length

Using the cylinder deduction formulas the net volume of the log is calculated to be 3.080 m^3.

Three steps are required for a ring defect deduction. Using the same methods as for heart rot:

1. Find a volume using the outside diameters and length of the ring.
2. Find the volume of the sound core using the inside diameters of the ring.
3. Subtract the volume of the sound core to get the volume of the outside ring (Step 2 minus Step 1).

Calculate the volume of the defect using the outside and inside diameters of the defect.

Outside diameter cylinder volume:

Half volume of 12.0/24	=	1086 dm^3
Half volume of 12.0/20	=	+ 754 dm^3
Full volume of 12.0/20/24	=	1840 dm^3

Inside diameter cylinder volume:

Half volume of 12.0/20	=	754 dm^3
Half volume of 12.0/16	=	+ 483 dm^3
Full volume of 12.0/16/20	=	1237 dm^3

Volume of defect equals outside cylinder volume minus inside cylinder volume.

Defect volume	=	1840 - 1237 = 603 dm^3

A percentage factor may be applied at this point for a partial ring defect (i.e., if the ring arc forms only one third of the circumference, multiply the above volume by 0.33 or 33 percent).

Defect volume: 603 = 1.980 m Length deduction
AUV: 307

12.0 - 2.0 = 10.0 m Net length

Net Dimensions – 10.0 27/35

7.7.8.3 Ring Defect - Partial Length of Log

Measurements for Defect Volume:

- the estimated defect length in metres to the nearest tenth of a metre,
- the outside diameter of the ring defect visible at the log end in rads, and
- the inside diameter of the ring defect visible at the log end in rads

7.7.8.3.1 Example and Illustration - Ring Rot, Partial Length

Ring rot is visible at only one end of the log in Figure 7.9. Because there are no other indicators, the rot is estimated to travel one half the length of the log and the ring's inner and outer diameters are presumed to be the same at both ends.

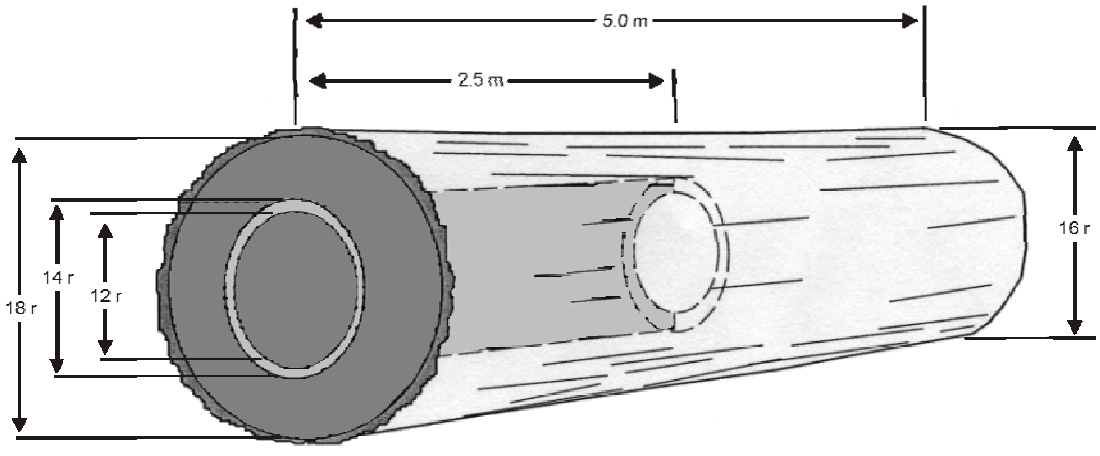

Figure 7.9 A Log with Partial Length Ring Rot.

7.7.8.3.2 The Gross/Net Calculation – Ring Rot, Partial Length

Using the formula used for finding the net volume of a log with a ring defect which does not project through a log:

$$V = \left[\left(T^2 + B^2\right)xLxF\right] - \left[\left[\left(ODB^2 + ODB^2\right)xDLxF\right] - \left[\left(IDB^2 + IDB^2\right)xDLxF\right]\right]$$

Where the following values are substituted for the variables:

T = 16 rads,

B = 18 rads,

L = 5 m,

F = 0.0001570796,

ODB = 14 rads,

IDB = 12 rads,

DL = 2.5 m,

$$V = \left[\left(16^2 + 18^2\right)x5.0xF\right] - \left[\left[\left(14^2 + 14^2\right)x2.5xF\right] - \left[\left(12^2 + 12^2\right)x2.5xF\right]\right]$$

$$V = \left[580x5.0x0.0001570796\right] - \left[\left[392x2.5x0.0001570796\right] - \left[288x2.5x0.0001570796\right]\right]$$

$$V = 0.456 - \left[0.154 - 0.113\right]$$

$$V = 0.456 - 0.041,$$

$$V = 0.415\ m^3.$$

7.7.8.3.3 Net Dimensions Calculation - Ring Rot, Partial Length

The net volume of the log is calculated as follows:

AUV 16/18 = 91 dm^3

Calculate the volume of the defect using the outside and inside diameters of the defect. Outside diameter cylinder volume:

Full volume of 025/14 = 154 dm^3 (2 x half volume)

Inside diameter cylinder volume:

Full volume of 025/12 = 112 dm^3 (2 x half volume)

Volume of defect equals outside diameter cylinder volume minus inside diameter cylinder volume.

Defect volume = 154 – 111 = 42 dm^3

A factor may be applied at this point for a partial ring defect (for example, if the ring arc forms only one-half of the circumference, multiply the above volume by 0.5 or 50 percent).

Defect volume: 42 = 0.461 m Length deduction

AUV: 91

5.0 - .5 = 4.5 Net length

Net Dimension – 4.5 16/18

Net Volume – 0.410 m^3

7.7.9 Pocket Defects

7.7.9.1 Pocket Rot Conventions

1. Pocket rot, unlike heart rot, is not confined to growth rings and is therefore not often circular in profile. Each segment of decay may be enclosed in an area which most resembles the shape, four-sided, triangular or circular. Section 6.3 of the *Gross Measurements Procedures* chapter define ways to enclose log segments and sectors for finding their volumes, and these same methods apply equally to irregular rot shapes. When calculating a deduction, the scaler then uses a method appropriate to the chosen shape.

2. Where multiple pockets of rot are present, and are less than 5 rads apart, experienced scalers group the individual rot volumes together visually rather than carrying out a number of discrete calculations. An example of enclosing pockets is provided in Section 7.7.10.3 (triangular defect) of this chapter.

3. When estimating the distance that pocket rot travels down a log, use the same conventions as used in the heart rots, including conk rot, if there is evidence of conk.

Measurements for Defect Volume:

- the defect length in metres to the nearest tenth of a metre (the same as the measured log length),
- if four-sided, the height and width of both defect ends in rads,
- if round or out of round, the diameters at both ends in rads,
- if triangular, the base and height at both ends in rads, and
- if multiple, the defects can be amalgamated or grouped together to form one defect.

The *Gross Measurements Procedures* chapter of this manual provides detailed information on enclosing irregular defects and determining representative dimensions.

7.7.9.1.1 Example and Illustration - Pocket Defect, Through-running

The log in the figure below is infected with a type of rot which forms in pockets rather than following the growth rings. Its shape is closer to being rectangular than circular.

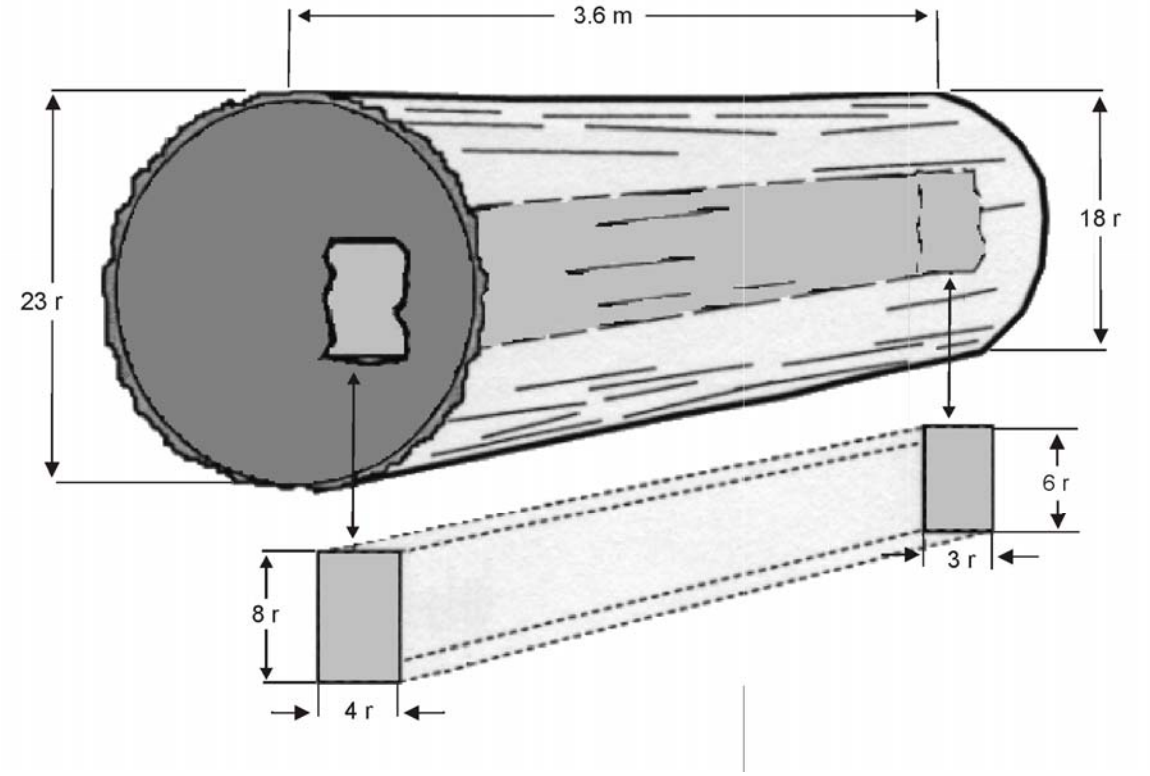

Figure 7.10 A Log with Through-running Pocket Rot.

7.7.9.1.2 The Gross/Net Calculation – Pocket Rot, Through Running

Using the formula for finding the net volume of a log with a rectangular defect which projects the full length of a log:

$$V = \left[\left(T^2 + B^2\right)xLxF\right] - \left[\frac{\left[\left(DHTxDWT\right) + \left(DHBxDWB\right)\right]xDLx0.0004}{2}\right]$$

Where the following values are substituted for the variables:

T = 18 rads,

B = 23 rads,

L = 3.6 m,

F = 0.0001570796,

DHT = 3 rads,

DWT = 6 rads,

DHB = 4 rads,

DWB = 8 rads,

DL = 3.6 m,

$$V = \left[\left(18^2 + 23^2\right)x3.6x0.0001570796\right] - \left[\frac{\left[\left(03x06\right) + \left(04x08\right)\right]xDLx0.0004}{2}\right]$$

$$V = \left[853x3.6x0.0001570796\right] - \left[\frac{50x3.6x0.0004}{2}\right],$$

$$V = 0.482 - \left[\frac{0.072}{2}\right],$$

$$V = 0.482 - 0.036,$$

$$V = 0.446\ m^3.$$

7.7.9.1.3 Net Dimensions Calculation - Pocket Rot, Through Running

Using the four-sided prism or "rectangular box" deduction formulas the net volume of the log is calculated as follows:

The defect is enclosed in a box representing the area of the defect. The measurements section of this chapter provides detailed information on enclosing irregular defects and determining representative dimensions. An example of grouping multiple pockets into a unit is provided in Section 7.7.10.3, where three individual pockets of rot are enclosed in a triangular shape.

Calculate the unit volumes of the defect ends by multiplying the height by the width by the factor of 0.4 to convert the end area of the defect from "square rads" to unit volumes:

3 x 6 x 0.4	=	7 dm^3
4 x 8 x 0.4	=	+ 13 dm^3
Sum of unit volumes	=	20 dm^3
Divided by 2	=	10 dm^3, the AUV

Multiply the average unit volume of the defect by the length of the defect to obtain the defect volume:

Unit volume 10 dm^3 x 3.6 m		=	36 dm^3
Defect volume:	36	=	0.269 m Length deduction
AUV:	134		

3.6 – 0.3 = 3.3 m Net length

Net Dimensions 3.3 18/23

Net Volume – 0.442 dm^3

7.7.9.2 Pocket Defect - Partial Length

The log in Figure 7.11 is infected with a heart rot in the shape of a pocket, and it is estimated to travel 3.8 m.

Measurements for Defect Volume:

- the estimated defect length in metres to the nearest tenth of a metre,
- if four-sided, the height and width of the defect visible at the log end in rads,
- if round or out of round, the diameter visible at the log end in rads,
- if triangular, the base width and height visible at the log end in rads,
- if multiple, the defects are amalgamated or grouped together to form one defect, and
- in pocket defects with only one end visible, the diameter of the unseen end is assumed to be the same as at the measured end.

7.7.9.2.1 Example and Illustration - Pocket Rot, Partial Length

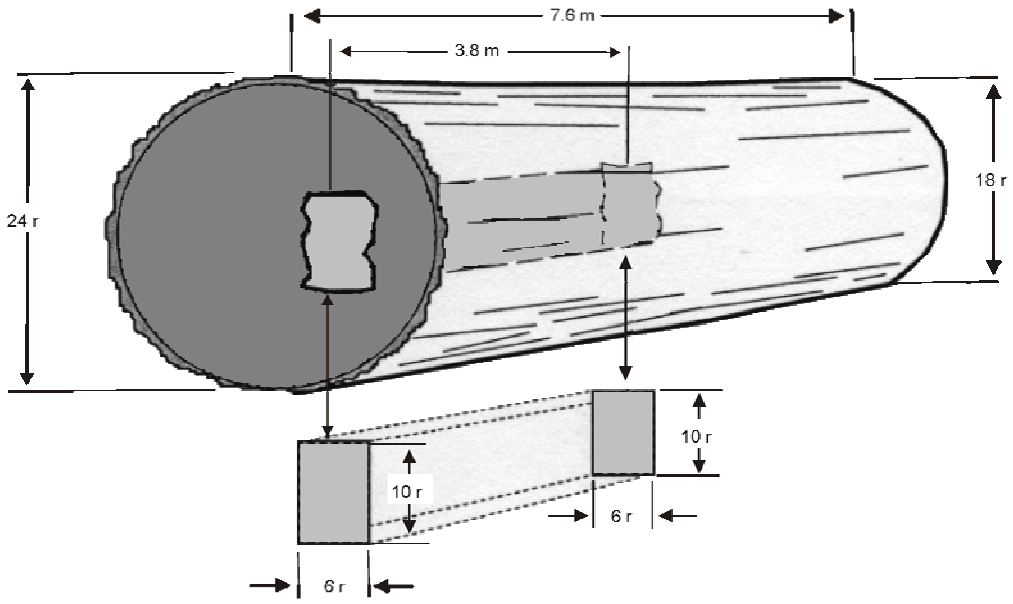

Figure 7.11 A Log with Partial-length Pocket Rot.

7.7.9.2.2 The Gross/Net Calculation – Pocket Rot, Partial Length

Using the formula for finding the net volume of a log with a rectangular defect which does not project the full length of a log:

$$V = \left[\left(T^2 + B^2\right) x L x F\right] - \left[(DHT x DWT) x DL x 0.0004\right]$$

Where the following values are substituted for the variables:

T = 18 rads,

B = 24 rads,

L = 7.6 m,

F = 0.0001570796,

DHT = 06 rads,

DWT = 10 rads,

DL = 3.8 m,

$$V = \left[\left(18^2 + 24^2\right) x 7.6 x 0.0001570796\right] - \left[(06 x 10) x 3.8 x 0.0004\right],$$

$$V = \left[900 x 7.6 x 0.0001570796\right] - \left[60 x 3.8 x 0.0004\right],$$

$$V = 1.074 - 0.091,$$

$$V = 0.983 \text{ m}^3.$$

7.7.9.2.3 Net Dimensions Calculation

Using the cubical or "rectangular box" deduction formulas the net volume of the log is calculated as follows:

The defect is enclosed in a box representing the area of the defect. The *Gross Measurements Procedures* chapter of this manual provides detailed information on enclosing irregular defects and determining representative dimensions.

Calculate the unit volumes of the defect ends by multiplying the height by the width by the factor of 0.4 to convert the end area of the defect from "square rads" to unit volumes, and multiply by the defect length to obtain the defect volume.

Unit volume = 6 R x 10 R x 0.4 = 24 dm^3

Defect Volume = 24 dm^3 x 3.8 m = 91 dm^3

Defect volume: 91 = 0.643 m Length deduction

AUV: 141.5

7.6 – 0.6 = 7.0 m Net length

Net Dimensions – 7.0 18/24

Net Volume – 0.989 m^3

In the case of multiple scattered pockets (5 rads or more apart) or pipes, calculate the volume of each one and add them together. Where there are several small close pockets (less than 5 rads apart), visually group them together and use one measurement.

7.7.10 Triangular defects

7.7.10.1 Example and Illustration - Triangular Defect

The log in Figure 7.12 has pockets of rot. The pockets fit best into a triangle shape, and because there are no other indicators, the rot is assumed to travel half way through the log. This method may be applied to any other defect which most closely fits a triangle shape.

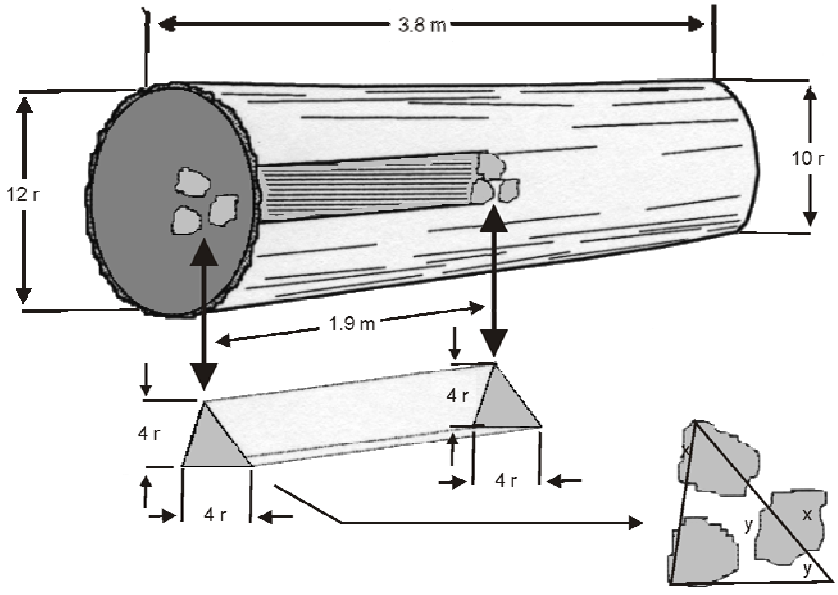

Figure 7.12 A Log with Partial-length Triangular Defect.

7.7.10.2 The Gross/Net Calculation – Triangular Defect

Using the prism formula for finding the net volume of a log with a triangular defect:

$$V = \left[\left(T^2 + B^2\right) x L x F\right] - \left[\left[\frac{\left(DHT x \frac{DWT}{2}\right) + \left(DHB x \frac{DWB}{2}\right)}{2}\right] x DL x 0.0004\right]$$

Where the following values are substituted for the variables:

T = 10 rads,

B = 12 rads,

L = 3.8 m,

F = 0.0001570796,

DHT = 4 rads,

DWT = 4 rads,

DHB = 4 rads,

DWB = 4 rads,

DL = 1.9 m,

$$V = \left[\left(10^2 + 12^2\right) x 3.8 x 0.0001570796\right] - \left[\left[\frac{\left(4 x \frac{4}{2}\right) + \left(4 x \frac{4}{2}\right)}{2}\right] x 1.9 x 0.0004\right]$$

$$V = \left[244 x 3.8 x 0.0001570796\right] - \left[\left[\frac{8+8}{2}\right] x 1.9 x 0.0004\right],$$

$$V = 0.146 - \left[8 x 1.9 x 0.0004\right],$$

$$V = 0.146 - 0.006,$$

$$V = 0.140 \ m^3$$

7.7.10.3 Net Calculation - Triangular Defects

Using Smalian's formula with factor the net volume of the log is calculated as follows:

This method of making a deduction is appropriate in cases where the shape of the defect most closely approximates that of a triangle.

In the case of multiple scattered pockets (5 rads or more apart) pockets or pipes, calculate the volume of each one and add them together. Where there are several small close pockets (less than 5 rads apart), visually group them together and use one measurement. The volume of firmwood between the pockets must be accounted for as shown in Figure 7.12. In grading, it is excluded, as explained in the Timber Grading chapter of this manual.

Whatever form a triangle may take the formula for finding its area is always one half the base times the height.

The triangle formula for scaling purposes is:

Unit volume = BH x 0.2

For the pocket rot visible at the end of the log:

Base = 04 r

Height = 04 r

Unit volume = 04 x 04 x 0.2

Unit volume = 3.2 dm^3

Multiply the defect unit volume by the length of the defect:

Defect volume = 3.2 x 1.9 = 6 dm^3

Defect volume: $\frac{6}{36}$ = 0.166 m Length deduction

AUV:

3.6 – 0.2 = 3.4 m Net length

Net Dimensions – 3.4 m 10/12

Net Volume – 0.130 m^3

7.7.11 Sap Rot Conventions

Logs having sap rot are scaled with the rot included in the gross scale. The difference between the gross scale of the outer scaling diameter and the net scale of the inner scaling diameter will be the deduction volume if no other defects are present.

7.7.11.1 Sap Rot Examples and Calculations

Scalers should use the "gross-net" scale method to provide additional information on the gross dimensions and volume of the log, the volume of the rot, and the net dimensions and volume.

The log in Figure 7.13 was bucked from a windfall tree and has been lying on the ground long enough for fungi to have eaten into the sap wood 2 rads deep at the butt end and between 1 and 2 rads deep at the top end.

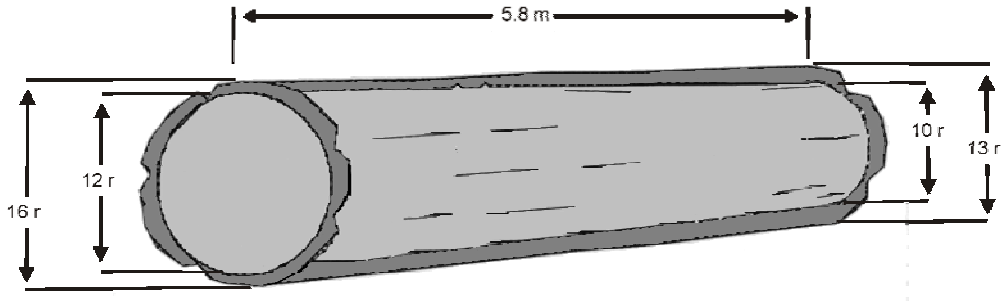

Figure 7.13 A Log with Sap Rot.

Measurements for Defect Volume:

- the defect length in metres to the nearest tenth of a metre,
- the net top end diameter (inside the defect) in rads,
- the net butt end diameter (inside the defect) in rads.

7.7.11.2 Gross/Net Calculation – Sap Rot, Full Length

Using the formula used for finding the net volume of a log with a sapwood defect which projects through a log:

$$V = \left[\left(T^2 + B^2\right)xLxF\right] - \left[\left[\left(T^2 + B^2\right)xDLxF\right] - \left[\left(NDT^2 + NDB^2\right)xDLxF\right]\right]$$

Where the following values are substituted for the variables:

T = 13 rads,

B = 16 rads,

L = 5.8 m,

F = 0.0001570796,

NDT = 10 rads,

NDB = 12 rads,

DL = 5.8 m,

$$V = \left[\left(13^2 + 16^2\right)x5.8xF\right] - \left[\left[\left(13^2 + 16^2\right)x5.8xF\right] - \left[\left(10^2 + 12^2\right)x5.8xF\right]\right]$$

$$V = \left[425x5.8x0.0001570796\right] - \left[\left[425x5.8x0.0001570796\right] - \left[244x5.8x0.0001570796\right]\right]$$

$$V = 0.387 - \left[0.387 - 0.222\right],$$

$$V = 0.387 - 0.165,$$

$$V = 0.222 \text{ m}^3.$$

7.7.11.3 Net Dimensions Calculation-Sap Rot-Full Length

Scalers using volumetric scale will use this method rather than the diameter deduction method shown below to provide additional information on the gross dimensions and volume of the log, the volume of rot and the net dimensions and volume.

Calculate the gross top half volume of the outer cylinder:

Half volume of 05.8/13 = 154 dm^3

Calculate the gross butt half volume of the outer cylinder:

Half volume of 05.8/16 = 233 dm^3

Add the half volumes to find the full volume of the outer cylinder. The inner cylinder is found in the same way.

Full volume of 05.8/13/16	=	387 dm^3
Less the inner cylinder volume	=	223 dm^3
Equals the defect volume	=	164 dm^3

Defect volume:	164	=	2.484 m Length deduction
AUV:	66		

5.8 – 2.5 = 3.3 m Net length

Net Dimension – 3.3 13/16

Net Volume – 0.221 m^3

7.7.11.4 Net Dimensions Calculations – Diameter Deduction

This method simply ignores the sap rot and uses the diameters of the sound core of wood to find the net volume and recorded net dimensions. Although very simple to apply, it is a 'net' method and does not provide users of scale data with any information about the rot. Scalers using 'net dimensions methods' should use the length deduction method shown above to provide additional information.

Using the diameters of the firm core inside the rot, calculate the Net volume using the inner cylinder:

Net Dimensions – 5.8 10/12

Net Volume = 0.222 m^3

7.7.12 Other Defects

Measurements for Defect Volume:

- the length of the log in metres to the nearest tenth of a metre,
- the callipered diameters of both ends of the log at the points where the log is not affected by the defect,
- a factor for the missing portion of the log, or
- the measurements required for the shape of the defect in rads.

7.7.12.1 Missing Segments

Missing wood can take many forms. This example demonstrates the use of a percentage factor to represent the missing part, but any of the other methods described previously will serve just as well if they are more representative of the shape of the defect.

7.7.12.1.1 Example and Illustration - Missing Wood

The defect shown in Figure 7.14 is typical of missing wood. Such defects as burn saddles or charred wood could also apply to this example, and in this case, the missing portion is equal to 50 percent or 1/2 the diameter of the log for 4.8 m.

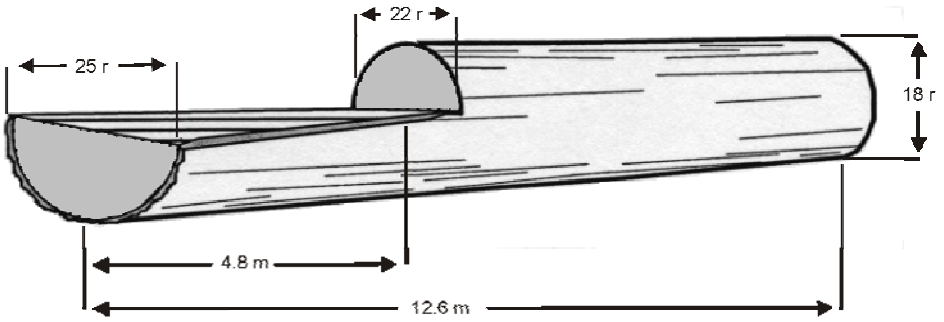

Figure 7.14 A Log with Missing Segment.

7.7.12.1.2 The Gross/Net Calculation – Missing Wood

Using the formula for finding the net volume of a log with a cylindrical defect and applying a percentage factor:

$$V = \left[\left(T^2 + B^2\right)xLxF\right] - \left[\left[\left(DT^2 + DB^2\right)xDLxF\right]x\frac{\%f}{100}\right]$$

Where the following values are substituted for the variables:

T = 18 rads,

B = 25 rads,

L = 12.6 m,

F = 0.0001570796,

DT = 22 rads,

DB = 25 rads,

DL = 4.8 m,

$\%f$ = 50 percent,

$$V = \left[\left(18^2 + 25^2\right)x12.6x0.0001570796\right] - \left[\left[\left(22^2 + 25^2\right)x4.8x0.0001570796\right]x\frac{50}{100}\right]$$

$$V = \left[949x12.6x0.0001570796\right] - \left[\left[1109x4.8x0.0001570796\right]x0.5\right]$$

$$V = 1.878 - 0.418$$

$$V = 1.460\ m^3$$

7.7.12.1.3 Net Dimensions Calculation – Missing Wood

Using the cylindrical deduction formula with factor the net volume of the log is calculated as follows:

AUV volume of 18/25 = 149 dm^3

The half volume at the upper limit of the defect:

Half volume of 04.8/22 = 365 dm^3

Plus the half volume at the lower limit of the defect:

Half volume of 04.8/25 = 472 dm^3

Equals the full volume of the portion of the log affected by the defect:

Full volume of 04.8/22/25 = (365 + 472) = 837 dm^3

Multiplied by the percentage missing, is the volume of the defect:

Volume of defect = 837 x 0.5 = 418.5 = 418 m^3

Defect volume: 418 = 2.805 m Length deduction

AUV: 149

12.6 – 2.8 = 9.8 Net length

Net Dimensions – 9.8 18/25

Net Volume – 1.461 m^3

It is tempting to reduce the length of the log by 1/2 the length of the defect, but it is a dangerous concept to "fold in" 1/2 of the defect. In this example, the defect is 4.8 m long, so a deduction of 2.4 m will understate the volume of the defect. If this same defect occurred at the top end of the log, the 2.4 m deduction would overstate the volume of the defect. The relationship between the defect and the average unit volume of the log must be established.

7.7.13 Missing Sectors

Measurements for Defect Volume:

- the length of the log in metres to the nearest tenth of a metre,
- the callipered diameters of both ends of the log at the points where the log is not affected by the defect,
- a factor for the missing portion of the log, or
- the measurements required for the shape of the defect in rads.

The method of applying a factor is most effective for defects which extend to the geometric centre or pith of the log because it is simpler to estimate the affected percentage of the log. This method can be used for:

- Lightening scars,
- Frost checks, or
- Dead side.

If the defect does not extend to the pith, or if it is difficult to estimate the affected percentage with certainty, apply methods for the cylinder, cone, rectangular box or prism to find the defect volume.

7.7.13.1 Example and Illustration – Missing Segment/Surface Defect

The log in Figure 7.15 has a pie-shaped sector split out of it. This sector is about 15 percent of the whole piece. Other surface defects such as lightning scars and frost checks if they contain rot are good candidates for this method of firmwood deduction. It may be used in grading too, for those types of defects which affect recovery.

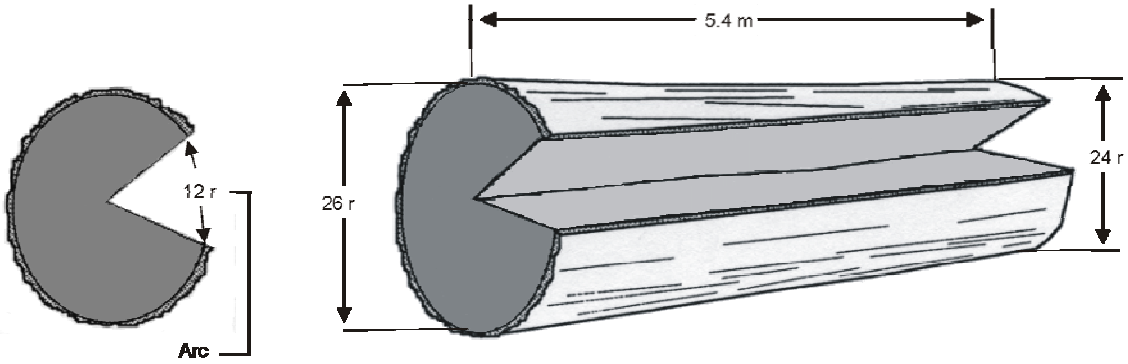

Figure 7.15 A Log with Sector Defect Extending to the Heart.

7.7.13.2 The Gross/Net Calculation – Sector Defect

Using Smalian's formula for finding the gross volume of a log with a pie-shaped defect and applying a percentage factor:

$$V = \left[\left(T^2 + B^2\right) x L x F\right] x \left[\frac{(100 - \%f)}{100}\right]$$

Where the following values are substituted for the variables:

T = 24 rads,

B = 26 rads,

L = 5.4 m,

F = 0.0001570796,

%f = 15 percent,

$$V = \left[\left(24^2 + 26^2\right) x 5.4 x 0.0001570796\right] x \left[\frac{(100 - 15)}{100}\right]$$

$$V = \left[1252x5.4x0.0001570796\right]x\left[\frac{85}{100}\right]$$

$$V = 1.062 \text{ x } 0.85$$

$$V = 0.903 \text{ m}^3.$$

7.7.13.3 Net Dimensions Calculation - Sector Defect

This example uses the application of a factor to determine net volume, in the same way as demonstrated in the previous example for missing wood. With pie-shaped defects which do not extend to the pith, however, it may be easier to find the volume of the defect by applying another shape as described in the measurements section of this chapter. This is because it is much more difficult to estimate the defect factor if it does not extend to the pith. That is, the volume in the outer 50% of a log's radius contains 75% of the log's volume. If a defect penetrates half way to the heart, for example, the deduction is reduced by 25 percent.

Using Smalian's formula with factor the net volume of the log is calculated as follows:

Using the scale stick, find the top end half volume:

Using the scale stick, find the gross volume of the log:

Gross Volume: Full volume of 5.4/24/26 = (488 + 573) = 1061dm^3

Eighty-five (85) percent of this log is sound, and the remaining 15 percent is defect, so the factor becomes 15/100 or .15. This factor may be easily visualized, if it is in simple fractions such as 1/4, 1/3, and 1/2. It can be calculated as a ratio of the circumference by multiplying the diameter by * and dividing the result into the arc of the defective sector, but finding the arc is not practical with conventional scaling tools. Degrees of arc are one option, using a watch or compass dial to learn to visualize sectors which are not obvious divisions of 360 degrees.

Factor from formal calculation:

Radius times π	=	26 x 3.14159 = 82 r circumference
Defect arc factor	=	12r arc / 82 = .146 = 0.15 or 15 percent

Factor from a clock face, major divisions in 12ths (secondary divisions in 60ths (minutes) which are equal to 6 degrees):

Position of hands	=	12:00 to 9 minutes
Defect arc factor	=	9 / 60 = 0.15 or 15 percent

Factor from a compass, major divisions in 8ths or 16ths (secondary divisions in 36ths or 10 degrees):

Position from north	=	54 degrees
Defect arc factor	=	54 / 360 = 0.15 or 15 percent 100% - 15% = 85%
Factor	=	0.85

There are several incremental options available to the scaler just from these two common objects, and of course, that which is most comfortable and familiar is preferred, even a piece of paper, which may be easily and accurately folded into 16ths.

Gross Volume X Factor = Net volume

1.061 m^3 x 0.85 = 0.902 m^3

7.7.14 Assessing Goitre

Goitre is a swelling or abnormal growth on the bole of a tree and rot may be associated with this defect. Internal rot seldom travels more than 1 m above and below the goitre. The volume of the rot may be assumed to be one-half of the volume of the log in the same length. For example, if the rot is estimated to travel two metres, the volume deduction will be 1 m of length. A deduction is made only when rot is present.

Timber Grading 8

8.1 Timber Grading

Scaling under the *Forest Act* means to determine the volume and to classify the quality of timber. Classifying the quality of timber is known as grading. Timber is graded in accordance with the schedules of timber grades, set out in the *Scaling Regulation*.

Grading is used to make volume information from the scale more meaningful and useful to traders in timber and managers of forest resources. The quality and potential end use of logs has significant influence on their value. In addition to monetary values, log grade can also determine whether logs are accounted for cut control purposes. Grading is a key component in marketing finished products such as lumber, plywood and shingles . The scalers' challenge is to assess the visible characteristics of each log, and, with strict reference to schedules of log grades, determine what can be recovered from it. This chapter describes the principles of grading and details how timber is graded for purposes of the Forest Act.

As grading is in place to make scale data more meaningful it must serve many users including buyers, sellers and forest administrators. Grading must also be responsive to changes in utilization, forest practices and administration. While log grades have evolved and expanded in response to changing needs, the basic principles of grading have changed very little.

8.2 Timber Grading Requirements

In British Columbia, all timber harvested from private or Crown lands or salvaged must be scaled. Grading is an integral component and a legal requirement of the scale.

The legal authority for grading falls under the *Scaling Regulation*. This regulation prescribes two grading schedules; coast and interior. The method of stumpage used in the area where the timber is cut determines which schedule must be used.

- timber cut in areas where a log based appraisal system is used (predominantly coast) must be graded with the *Schedule of Coast Timber Grades*, and
- timber cut in areas where a lumber based appraisal system is used (predominantly interior) must be graded using the *Schedule of Interior Timber Grades*.

This chapter explains how timber is graded in accordance with the schedules of timber grades. The chapter - *Special Forest Products* - describes the scaling and classification of these products and is not contained in the grading chapter.

8.3 Principles of Timber Grading

On the Coast, grades represent the size, quality, and quantity available for potential manufacture of specific end products (lumber, veneer, shingles and chips). In the interior, grades represent the size, quantity and quality available to manufacture lumber and chips only. The proportions of a log's gross scale that are suitable for the manufacture of products are important factors in determining its commercial value.

Grade rules typically include three components:

- minimum and/or maximum gross log dimensions,
- a requirement that a percentage of the log's gross volume must be available to manufacture a given product, and
- a requirement that a percentage of the product manufactured from the log must meet or exceed a given quality.

Application of the grade rules requires the scaler to:

- determine the log's gross dimensions,
- estimate what portion of the log is available to produce a given product, and
- consider the quality of the product that could be produced from the log.

To ensure grading is fair, consistent and reliable, it is premised on some basic principles:

- it is done in strict compliance with the grading rules contained in the schedule of grades,
- it assumes only common end products,
- it assumes only conventional manufacturing processes, and
- it is entirely independent of the marketing and/or processing practices of the purchaser.

It is the job of the scaler to assess the visible characteristics of each log and, with strict reference to the schedule of grades, determine what can be recovered from the log given its size and other characteristics. It is up to the manufacturer to get the best and most product out of the available volume.

The process of visualizing and quantifying the portions of the log not suitable for the production of lumber (or other product), is known as grade reduction. Unlike firmwood deductions that reduce the firmwood volume of the log, grade reductions are made solely for the purpose of determining the grade.

In addition to grade reduction, application of the grading rules requires the scaler to assess the quality of the products that could be produced from the log. This requires an assessment of the size, frequency and distribution of knots, and an assessment of any visible spiral grain or twist of the log.

The following sections describe log characteristics which:

- impact potential product recovery (quantity), and
- impact product quality.

Another principle of timber scaling and grading is timeliness. The following is an excerpt from the *Scaling Regulation* (BC Reg. 446/94) which addresses this topic.

Time of scaling

2 The owner of the timber and a person who has a right to the timber as a holder of an agreement under section 12 of the Act must ensure that timber required to be scaled under the Act is scaled as soon as possible after the timber is cut.

Late scale requirement

3 (1) If a regional manager, district manager or forest officer determines that timber required to be scaled under the Act has not been scaled as soon as possible after the timber is cut, he or she may order that the timber be scaled using an estimate.

(2) If a regional manager, district manager or forest officer is not satisfied with the reliability of the scale under subsection (1), he or she may order another scale to be undertaken to replace the scale.

(3) If, in the opinion of the regional manager, district manager or forest officer,

(a) the volume of the timber has changed, or

(b) the quality of the timber has deteriorated,

between the time the timber should have been scaled under section 2 and the time the timber is scaled under subsection (1) or (2), the scale under subsection (1) or (2) must be done by estimating the volume and grade of the timber at the time the timber should have been scaled under section 2.

8.3.1 Characteristics Which Reduce Product Recovery (Quantity)

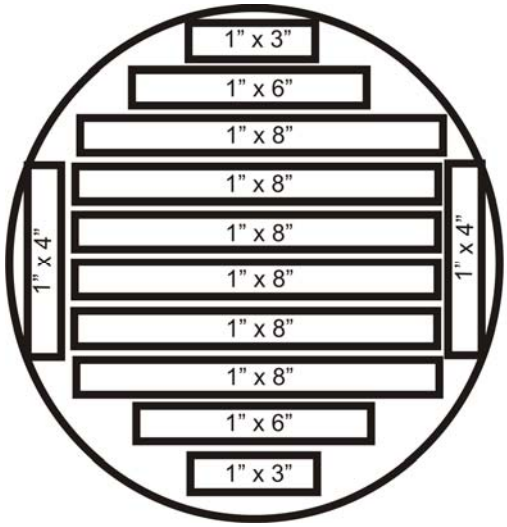

Lumber is a manufactured product derived from a log in a sawmill, or in a sawmill and planing mill, which when rough, shall have been sawed, edged and trimmed at least to the extent of showing saw marks or other marks made in the conversion of logs to lumber on the four longitudinal surfaces of each piece for it's overall length, and which has not been further manufactured other than by cross-cutting, ripping, resawing, joining crosswise and/or endwise in a flat plane surfacing with or without end matching and working. (Source - the National Lumber Grades Authority)

Figure 8.1 Minimum Dimensions for Recovery.

A board foot is the unit of measurement of lumber 1 inch (2.54 cm) thick, 1 foot (30.5 cm) wide, and 1 foot (30.5 cm) long, or its equivalent in thicker, narrower, or longer lumber.

The log characteristics discussed in this section reduce the proportion of the gross log suitable for the production of lumber, veneer, or shingles. Rot, hole, and char will also reduce the quantity of chips that are recoverable. The scaler must determine what portion of the log is not suitable for manufacture because of these defects. This is known as grade reduction or consideration. Although the defects affecting timber quality are described separately, the scaler must evaluate the whole log in terms of the cumulative effect of the separate quality defects observed.

8.3.1.1 Fractures and Fibre Separation

Wood fibres may separate or split across the annual rings (for example - surface checks, frost check) or between the annual rings (ring shake, water shake). Once this separation has occurred, any lumber manufactured across the separation will likely fall apart. Grading must account for the volumes of firmwood that cannot be cut into lumber, veneer, or shingles because of these fractures.

For the purpose of this manual, fibre separation perpendicular to the growth rings is referred to as *check*, and fibre separation between the growth rings is referred to as *shake*. Shakes are classified into two types according to the direction of the plane of fracture; the

heart shakes (often termed heart check) and the ring shakes. Surface checking occurs on the outer surface (sapwood) and often penetrates to the inner part (heartwood) of logs.

Types of Checks:

- End
- Surface (Straight)
- Spiral
- Weather

End checks are checks that show only on the ends of the log and extend from the outside surface towards the heart. These may or may not run up the bole of the log. Scalers must use good judgement in deciding how far a check runs along the bole of the tree. End checks are counted to assess the grade according to the Grade Code 2 *Log Requirements for Interior Grading*.

Surface (straight) checks are on the bole of the tree with no degree of spirality. Surface checks are assessed in conjunction with end checks to determine grade and in some instances may assist with determining the depth of checks on the bole of the log. Surface checks have a proportionately greater lumber recovery loss on small logs then larger logs.

Spiral checks may follow the deflection of the grain and can cause a much greater grade reduction than a straight check because of the loss due to the inclusion of the fibre as it spirals. Some situations where spiral checks may occur are in logs with frost checks and in snags.

Weather checks differ from end or straight checks in that they appear to be wider in the centre of the log end than at the edges. Often weather checks will radiate towards, but not as far as, the surface of the log. Weather checking occurs on the ends of logs and usually does not penetrate very far. Delays in presenting logs for scaling, such as leaving logs in the woods or in cold decks, often result in a type of surface check known as weather checks or sun checks, which are caused by rapid seasoning. These checks are usually about twice in depth at the ends of the log than elsewhere on the log because the end is where the fastest drying occurs, and observation of the log ends will tend to overestimate the overall penetration of this type of check.

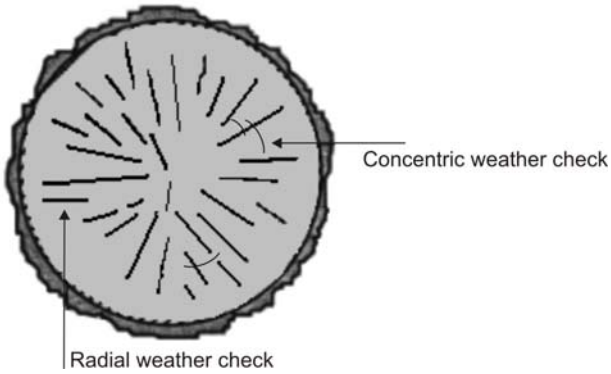

Figure 8.2 Weather Checking.

Surface and end checks due to delays in scaling are disregarded for the purposes of grading. The Forest Service may order that such checks be ignored. Breakage (splits and shatter), as a consequence of normal harvesting and log handling operations must be accounted for in the process of grading. Damage done to timber after delivery is not accounted for as a grade reduction.

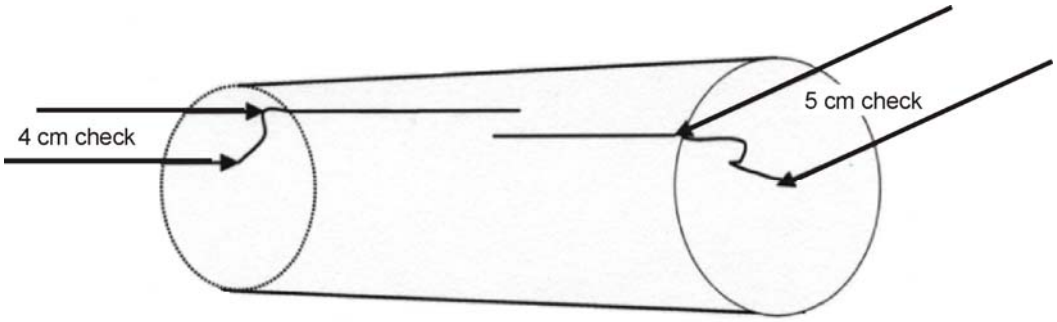

Figure 8.3 An Example of a Irregular Surface Checks

A check is a fibre separation across the growth rings. It can be straight or irregular and sometimes shows as broken or crooked on the ends of a log. Single checks will sometimes 'skip' along the length of a log. The scaler must first evaluate the check according to what can actually be seen on the log. Then they must follow the requirements for each grade as described in the Timber Grading chapters.

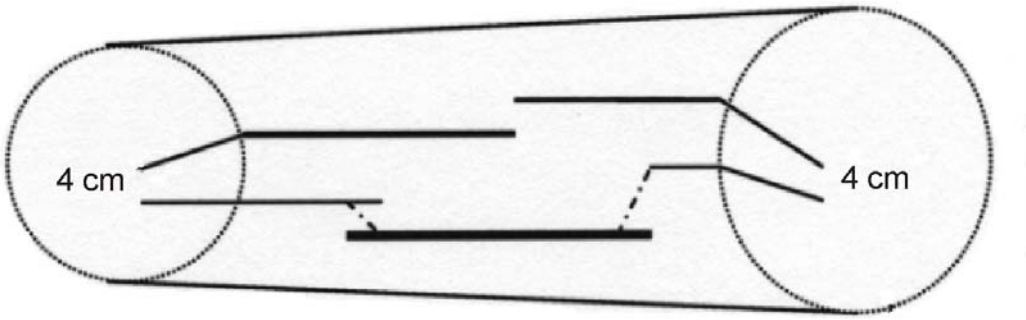

Figure 8.4 An Example of a 'Skipping' Irregular Surface Checks

8.3.1.2 Bark Seams

Bark seams are formed as a result of bark enclosing a point on the outside of a tree which has no wood growth, so that over time, a seam of bark is left extending inward from the edge of the tree. Lumber and veneer cannot be recovered from the area of the seam. The volume of firmwood that cannot be manufactured because of bark seams must be determined by blocking out the end area of the wood lost for product recovery and multiplying the cross sectional area by the length of the seam. If there is at least 10 cm between bark seams, it is considered available to manufacture a product

8.3.1.3 Sweep, Crook and Pistol Grip

Sweep is a bow like bend in the trunk of a tree, whereas crook is a definite kink at one point in the stem most often as a result of the tree losing its leader. Pistol grip is a pronounced bend at the butt end of a log resembling the handle of a pistol and is often seen on trees growing on steep side hills. All three reduce the amount of product that can be recovered. The volume of wood that cannot be manufactured because of sweep, crook, or pistol grip must be estimated. Crook also frequently accompanies a firmwood loss since decay fungi may have entered the stem through the broken leader.

8.3.1.4 Rot, Hole, Char, and Missing Wood

Rot is caused by a variety of fungi which break down and feed off the lignin and/or cellulose in the wood. Hole is rot in its final stages. Char is wood that has been reduced or severely weakened by combustion or extreme heat exposure (fire). Rot is the most common firmwood defect for which a grade reduction must be made.

The rot fungus typically enters the tree through a root, broken branch, damaged leader or scar on the stem. The remains of an old scar, a damaged leader, a crook or fork in a log often mean rot is present. Scalers must carefully inspect all visible log surfaces for indicators of firmwood defects. Logs cut from older trees are more likely to contain rot, especially logs cut from species such as cedar, hemlock and balsam which are more susceptible to attack by fungi.

No firmwood deductions are made for stain (incipient decay), as long as the wood is still firm, but it may be a consideration in assessing some coastal grades. If fragments of wood, taken from the suspect area don't hold their integrity when pulled apart, then the wood is rotten, not firm, and both a firmwood deduction and a grade reduction must be made.

In grading, the scaler must estimate how much the rot will reduce the percentage of the log that can be manufactured. Some of the sound wood adjacent to the rot is also lost to lumber production since the sawyer must square out around the defect. To account for this additional loss a trim allowance around the defect is usually made.

The scaler must also consider collars and shells of firmwood that surround defects as well as logs and log segments, which are too short to manufacture the products as stated in the grade rules.

8.3.2 Characteristics Which Reduce Product Recovery (Quality)

The previous section looked at the grade reductions that reduce the quantity of product that a given log is likely to yield. In log grading, we are also concerned with the quality of the products that can be produced from the log.

There are two parts to the grading question that must be answered:

- how much product will a particular log cut, and
- of that product cut, how much of it will be merchantable and/or clear.

In addition to the percentage of a log that can be manufactured into a given product, the grade rules also specify that a minimum percentage of the product manufactured from the log must be merchantable and/or clear. This section deals with the second part of the grading questions.

Merchantability is determined by assessing the size and placement of knots, and the degree of any spiral or twist observed on the log. Merchantable lumber is considered to be lumber which grades better than utility. There is no direct relationship between log grading and lumber grading, as lumber graders assess the finished product, whereas scalers must assess the round log from which the product is cut. For instance, the grain slope permitted by the National Lumber Grades Authority* differ from the twist allowance in the log grading schedules; a scaler cannot presuppose the affect of grain slope on lumber, because sawing methods have a major impact on grain slope. The log grading rules therefore only gauge the recovery potential of a log under average sawing conditions.

Where the grade rules require that a percentage of the out turn be clear, it means that the stated proportion of the product must be free of knots and stain.

In addition to the defects that reduce the potential product recovery volume, some log characteristics reduce the quality of the products that may be recovered. These characteristics include twist (or spiral grain) and knots.

* *NLGA is the organization responsible for writing, interpreting and maintaining Canadian lumber grading rules and standards.*

8.3.2.1 Twist (Spiral Grain)

As trees grow they often spiral about their central axis. When these twisted trees are manufactured into lumber, slope of grain may affect strength, and therefore the quality of the lumber. When twist is excessive, the lumber milled from such a log will not be merchantable. Where other quantity reducing defects that follow the grain such as spiral surface checks occur in conjunction with twist, the loss in terms of product recovery caused by those defects is greatly increased.

Twist must be measured where it represents the degree of deflection. Areas around large knots, knot clusters, crooks, forks, burls, goitre, catface and other irregularities are not representative and must be avoided. Twist may also show a general change over the length of a log. On some logs, only a lineal segment rather than the entire log may twist. In this instance where twist is not uniform, only lumber sawn from the excessively twisted segment will have its merchantability affected and the scaler will have to determine what percentage of the lumber will be non-merchantable. In the Interior sections of the log displaying excessive grain deflection are deemed to be unsuitable for the manufacture of merchantable lumber and that section will constitute a grade consideration.

Grain deflection is expressed as a percentage of log diameters using the measurement perpendicular to the longitudinal axis of a log. In coast grading it is the top diameter for logs up to 12.8 m in length and for logs over 12.8 m in length, the diameter inside bark at a point 12.8 m above the butt of the log. In Interior grading the top diameter is used for logs up to and including 8 m and the measured mid-point diameter is used for logs over 8 m.

Twist is measured over a representative 30 cm section of log length according to the principles outlined below. These are:

- twist is measured where it can be seen,
- assumptions are not made about portions of a log not visible, and
- areas around irregularities are avoided.

The amount of twist permitted for a particular grade is expressed as a percentage of log's diameter according to the grade rules. Specific twist requirements are described by grade

in the *Coastal and Interior Schedule of Timber Grades*. Grain deflection is measured as described in Figure 8.5.

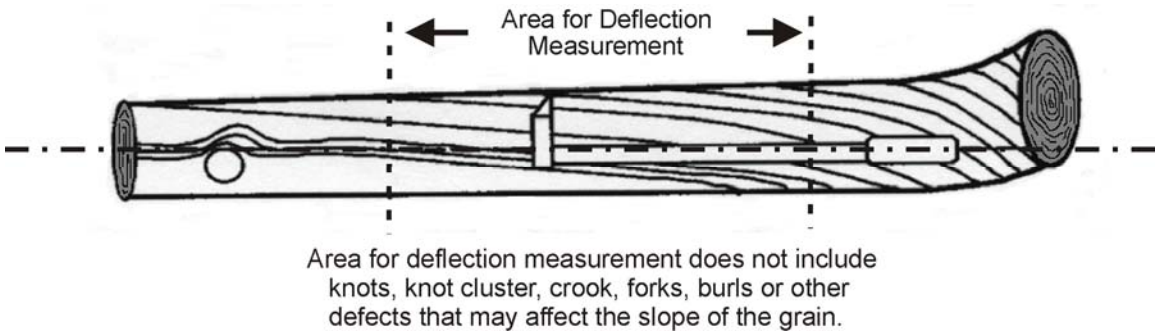

Figure 8.5 Measuring Twist – Placing the Stick.

As shown , orient the scale stick parallel with log's longitudinal axis .

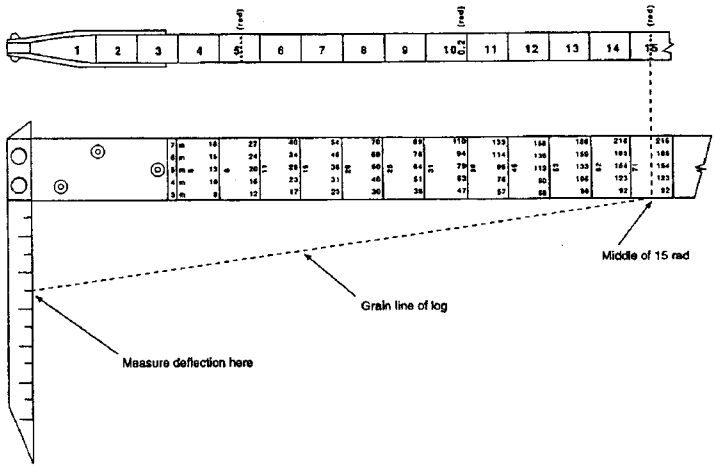

Figure 8.6 Measuring Twist – Reading the Deflection.

With its shaft parallel to the log's central axis, the stick is positioned such that one of the log's grain lines passes right through the middle of the 15 rad class (30 cm). The point where this grain line intersects the tine is the deflection. The deflection is then read where the grain line intersects the tine. Here, it reads as 5 cm.

> The tine of this stick is graduated in centimetres. Although not a requirement, scalers often mark them out to improve accuracy.

In Figure 8.6 this defection measurement is 5 cm or 2.5 rads. If this deflection was measured from a log with a 33 rad top, it would constitute a deflection of 7.6 percent.

$$\frac{5\,cm}{66\,cm}\,x\,100 = 7.57575\,or\,7.6\%$$

8.3.2.2 Knots

The size, type, and distribution of knots have a significant impact on lumber quality and are a key consideration in applying the grade rules.

8.3.2.2.1 Size of Knots

The presence of knots or knot indications on a log may preclude the production of clear lumber from the affected portion. Knots larger than 2 cm will reduce lumber quality because the grain deflection around the knots weaken the recovered lumber, even though the actual knot fibres may be denser and stronger than its supporting tissue. The larger the knot size, the greater the grain deflection, causing cross grain in the region of the knot. Extremely large knots will make the cutting of merchantable lumber difficult. Knot size is measured in centimetres or rads of diameter.

Where the Grade Rule requirements stating maximum knot sizes and/or location are met, the merchantable and/or clear lumber percentage requirement for the grade will be satisfied.

Individual grade requirements specify the maximum knot sizes by top diameter class with the exceptions of, for on the Coast logs 12.8 m in length and over, the diameter at 12.8 m measured from the butt end of the log is used for knot assessment.

In the interior, logs over 8 m in length, the top half of the log is assessed using the top diameter and the bottom half is assessed using the midpoint diameter.

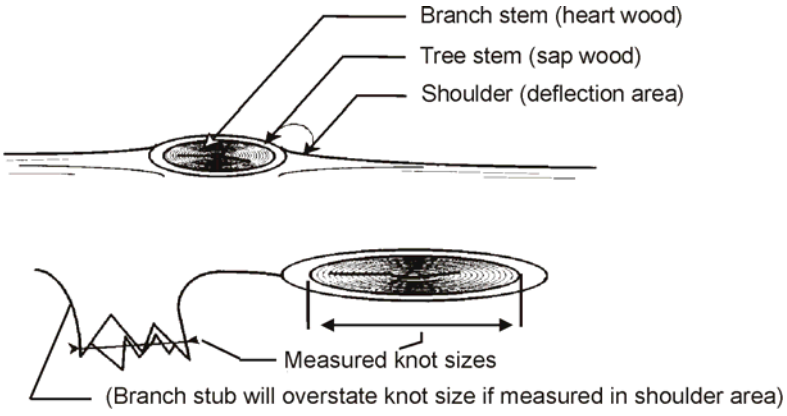

Figure 8.7 Measuring Knot Diameters.

Critical to the assessment of knot diameter is to exclude grain deflection around the knot in the measurement. Under close examination, the knot will have a circular grain pattern, like a log end, and this is the area measured. The tree stem wood grows around the knot

(deflection), and forms the shoulder wood. It is easy to measure loose or encased knots, because there is a clear distinction between the knot wood and the tree wood; tight or inter grown knots are harder to learn to assess, because the two are interconnected.

Maximum allowable knot size increases with the diameter of the log and are expressed in centimetres of diameter. When taking this measurement, only the actual knot should be measured and not the shoulder surrounding it.

In addition to their size and characteristics, the location and distribution of knots must be carefully considered. For example, if log segments must be 2.5 m long to produce merchantable lumber, occasional oversized knots are permitted if it is possible to cut merchantable lumber from between them. In general, one oversized knot is permitted every 3 m for the coast and every 2.5 m for the interior, allowing ample room for recovery of merchantable lumber between the knots. Similarly, where the oversized knots are concentrated in one quadrant, along one side, or near one end of the log, the remaining portions will yield merchantable lumber.

> As knots are a key determinant in log grading, it is important that scalers become very familiar with their impact. This knowledge is best achieved through on-site training, observation of log breakdown, and practice.

Knot spacing specifications for coast and interior grades are found in the Requirements for the Grade.

8.3.2.2.2 Types of Knots

Knots in timber are sound or rotten; and tight or loose. Lumber sawn from logs with sound, tight knots is generally of a higher quality than lumber with loose or rotten knots.

Rotten knots in timber occur when there are broken and dead branches in trees as these represent an entry point for fungus spores, which lead to decay. Rotten knots can also be indicators of internal decay. The appearance of knots that have been bucked through or bucking adjacent to such knots serves as good evidence of the pattern of decay characteristics for a particular timber stand and species.

Tight knots are found where the branches on the tree were still living or green when the tree was harvested. The tissue system of the branch is interconnected or intergrown with the tissue of the log, and the grain orientation in the trunk wood is laterally distorted around the knot and passes in a wide sweep on either side.

When a branch dies, the cambium in the branch ceases to function, and there is a break in the continuity of the woody tissue between the branch and the stem. The portion of the branch base that is embedded in the tree trunk after the branch dies causes a loose, encased, or black knot in lumber. Since the wood of the tree trunk is not continuous with

that of the encased knot, there is less distortion of the grain around it than with tight knots.

Consideration for knots is part of the application of the Grading Rules for both the Coast and the Interior

8.3.2.2.3 Distribution of Knots

The distribution of knots in logs is determined by the growth characteristics of the tree.

After becoming established, coniferous trees typically grow 0.2 to 1 m per year depending on the species and suitability of the growing site. When the tree matures upward growth decreases significantly. As Balsam, Fir, Pine, Spruce and Larch grow; they add a whorl of branches at the start of each year. Normal branch distribution in small diameter stems sees whorls spaced between 0.3 and 0.5 m apart. Red Cedar, Yellow Cedar, and Hemlock branches are not produced in regular whorls. Instead, their branches are spaced on the stems of young trees 0.3 to 0.5 m apart.

After a tree reaches mature height, additional branch whorls are still added each year but the branches are much closer together. Sometimes trees produce a number of branches in a bunch, resulting in a cluster of knots in the wood. A close grouping of knots (cluster knots or bunch knots) reduces the strength of the lumber cut from that portion of the log containing the cluster or bunch of knots.

In general, a cluster or bunch knot occurs where the knots are so close together that the grain of the wood is deflected around the knots rather than between them.

Bunches or clusters of knots are to be encircled with the smallest diameter circle or oval that will encompass the grouping. The average diameter of this circle or oval is then taken as the effective bunch knot diameter.

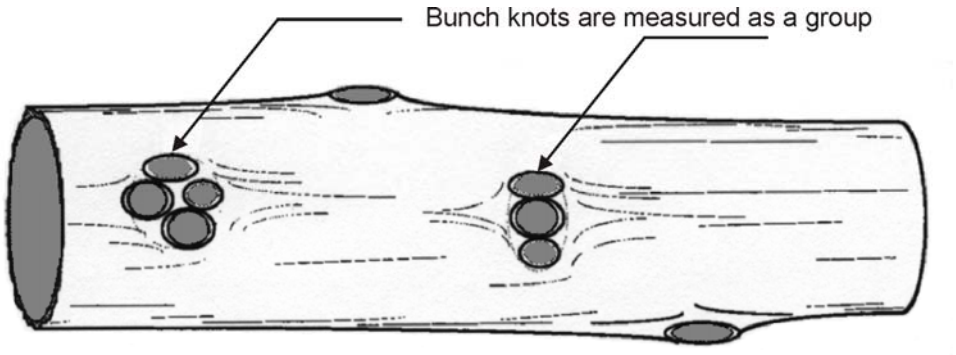

Figure 8.8 Measuring Bunch (cluster) Knots.

The figure above shows the measurement of bunch knots. Bunch knots or cluster knots are defined as those circumstances where the majority of the log's grain deflects around, rather than through or between a close grouping of knots, which will reduce the strength

of the lumber produced. Where this occurs, the group of knots is assessed the same as an oversized knot; the smallest circle or ellipse that will surround the cluster is taken as the knot diameter.

Certain species such as Douglas Fir, Larch, Cedar, Cypress and Alder, when stressed, produce adventitious branches (sucker limbs) which, after a period of time, may come to take the appearance of knots or knot clusters. These sucker limbs do not; however penetrate very far into the log since they form much later in the tree's life cycle than regular branches. Therefore, they do not have nearly as much impact on the manufacturing potential of the log as their size might suggest. Scalers working with such logs should come to recognise this characteristic and observe some of these logs in the breakdown process.

Knots that indicate the presence of conk or other stem rots should also be assessed in terms of their potential to indicate the extent of heart rot, rather than simply in terms of lowering lumber quality. For example, even though a knot may be under the maximum allowable size but is rotten, there is a good chance of a grade reduction for heart rot. However, the firmwood loss from rot confined to the knot is not significant enough to warrant a volume deduction or grade reduction in the large majority of cases.

8.3.2.2.4 Assessing Knots

The conventions used to assess knots are:

- the specified knot size and distribution in the grade schedules for any log grade is always based on the gross log diameter inside bark before any deduction is made for sap rot or other defects,
- knots are measured at right angles to the log length except in peeler grades where the maximum diameter is used,

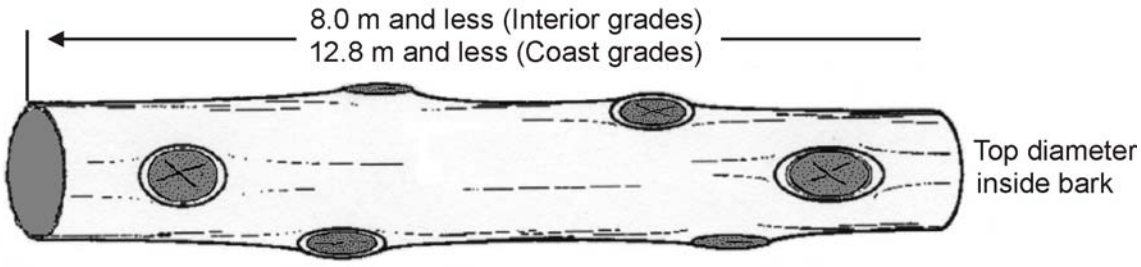

Figure 8.9 Assessing Knots - Coast and Interior.

- for interior logs up to and including 8 m in length, and for coastal logs up to and including 12.8 m, knots are assessed against the top diameter of the log
- for coastal logs greater than 12.8 m in length, knots are assessed against the diameter measured at 12.8 m from the butt end of the log,

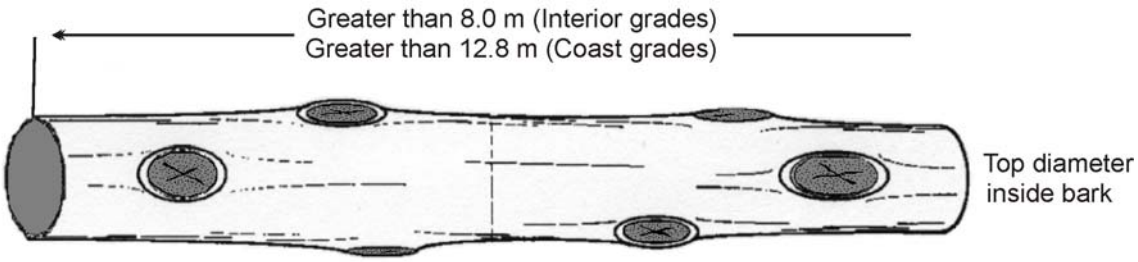

Figure 8.10 Knots and Midpoint.

- for interior logs greater than 8 m in length, a midpoint diameter must be taken. Knots on the butt half are assessed against the maximums specified for the midpoint diameter, and knots on the top half of the log are assessed against the maximums specified for the top diameter, and

- slabs are measured across their width for determining knot allowances. Widths for slabs of all shapes are illustrated in the Firmwood Measurement Procedures chapter. For purposes of knot assessment, if the thickness exceeds the width, the wider measurement is used.

Once the scaler has:

- identified the oversized knots from the top or top and mid-point diameters,

- determined that their spacing is less than 3 m for the coast and 2.5 m for the interior along the length,

- decided that a grade reduction is warranted, then

- it becomes necessary to observe the orientation and distribution of the knots in order to evaluate the affect on grade.

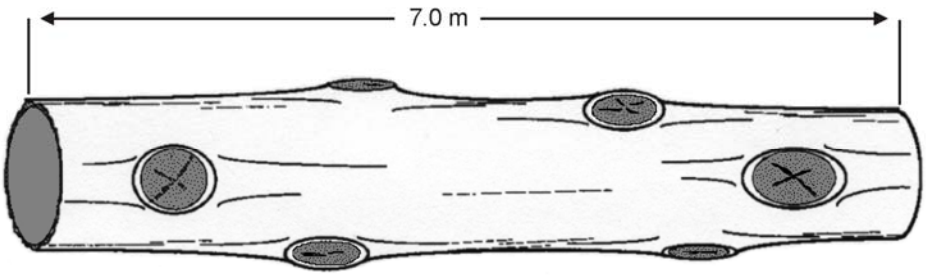

Figure 8.11 Oversized Knots Distributed Over Entire Surface.

The first log shown here has its oversized knots distributed over the entire length of the log. Because there is no portion of the log that will allow 2.5 m lumber, the log will not produce merchantable lumber and is one hundred percent grade reduction.

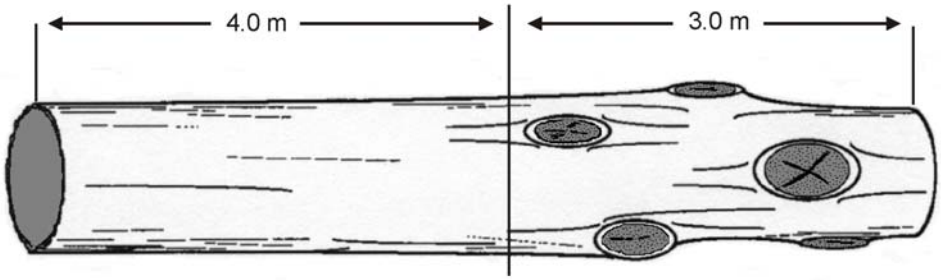

Figure 8.12 Oversized Knots Near the Top of the Log.

This example has oversized knots concentrated near the top of the log. After the scaler notes that 3 m of the log will not produce merchantable lumber, the impact on the quality of the whole log is calculated to be about 43 percent of its total length, but somewhat less than 43 percent of its volume.

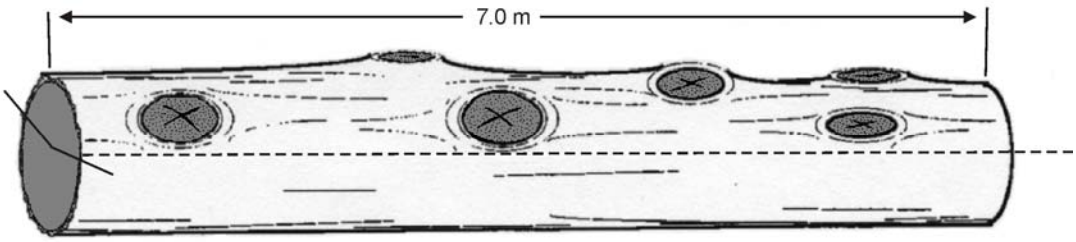

Figure 8.13 Oversized Knots on One Side.

The third log has its oversized knots concentrated along one side. Almost half of the log will not produce merchantable lumber because of this, but more than half is not affected at all by knots. Therefore, the impact on the quality of the whole log is estimated to be about 45 percent of its volume. However, size is also a factor in the assessment; a 30 rad log may be broken down into quarters to maximize merchantability, where a 5 rad log cannot even be halved.

Of course, these examples are conceptual in that knots do not usually present themselves so obligingly. With experience, scalers will learn to quickly understand the impact of knot location and distribution. However, it is best for the beginner to pick out each of the elements in turn. For example, if the knots are distributed along one quadrant and around the top end, do one assessment, then the other. The total assessment is the cumulative effect on the log.

8.3.2.3 Insect or Worm Holes

A number of insects lay eggs under the bark of trees and the larvae will bore through the wood as they develop. When the presence of borings is observed, the quality of potential products may be reduced and the log grade affected. In the Interior, Grade code 1 does not permit 5 or more insect holes to penetrate beyond the sapwood of the tree per running metre, except for those of the ambrosia beetle which are disregarded altogether.

On the Coast, most premium grades do not allow insect or worm holes to penetrate past the sap wood. Cedar is affected by the borings of larvae of the western cedar borer. It is known as powder worm and it is a serious defect, not allowed in six of the cedar coastal grades.

The ambrosia beetle attacks felled timber, and the small holes made by this insect are common. This is not a serious defect for sawlog and utility grades that require merchantable quality lumber. Where the borings penetrate beyond the sap wood, the affected portion of the heart wood may not produce any clear lumber.

Cedar is affected by the borings of larvae of the western cedar borer. It is known as powder worm and it is a serious defect, not allowed in six of the cedar coastal grades.

Damage caused by marine creatures, including teredos, is not considered in the official scale for volume or grading purposes, but should be noted as a remark on the scale return.

8.3.2.4 Non-Permissible Defects

There are a number of defects that are not permitted to be present in certain grades of logs. Where such a defect is present, the log will be disqualified from the grade in Coastal grading, and from lower grades where the log is required to have been "otherwise" the higher grade for which it has a prohibited defect. For Interior grading non-permissible defects may disqualify a log from the premium grade based on a number of factors.

Examples of defects which are not permitted in certain grades on the coast are conk stain, powder worm and in the interior, checks over 4 cm deep.

Some grades permit certain defects only to a clearly defined limited extent. Examples of this are ring shake, pocket rot, pitch pockets and the number of insect holes. When the defect is not confined to the stated limit, it is treated as a non-permissible defect for that grade. All of the above defects are defined by log grade under the Log Requirements to Make the Grade.

8.3.2.5 Grain Density (Ring Count) - Coastal Grading Only

The diameter growth rate of a tree is dependent upon the species, its genetic makeup, climate and other site specific conditions. Growth is more rapid early in the growing season, and the 'early wood' produced at this time consists of large, light coloured cells. The 'latewood' cells produced later in the season are smaller with thicker walls, and so

appear to be darker. Each pairing of light and dark bands comprises one 'annual ring', which marks one year's growth.

Grain density or the closeness of the annual rings is a consideration in coastal grading. Finer grained logs (more closely spaced annual rings) yield higher quality lumber and veneer, and as such, usually command higher values than logs with more widely spaced annual rings.

8.3.2.6 Compression Wood (Interior only)

The general effects of compression wood on the performance of sawn timber are reduction in the strength, stiffness and dimensional stability, resulting in a decrease in yield of high quality end products.

Compression wood is a type of defect that tends to form in conifers on the underside of leaning stems, on the leeward side of trees exposed to strong winds, in crooked stems and in the lower part of trees growing on a slope. Compression wood may cause problems in processing the log by exhibiting bow and spring in the manufactured product.

Compression wood is formed in a leaning tree and it is often characterized by a dense hard brittle grain and reacts to seasonal moisture changes. In hardwood trees, it forms on the upper side of the lean and is called tension wood. In softwood trees it forms on the lower side of the lean and is called compression wood.

Where the heart (pith) is displaced by more that 20%, from the centre of the log it affects the quality of the lumber that is cut from the "compressed" side, or portion of the log. Compression wood is identified in off centre hearts by the "compressed" or tight grain that appears on the smaller log side (shaded area), while the other (larger segment) of the log has normal ring separation and is free of "compression" effects.

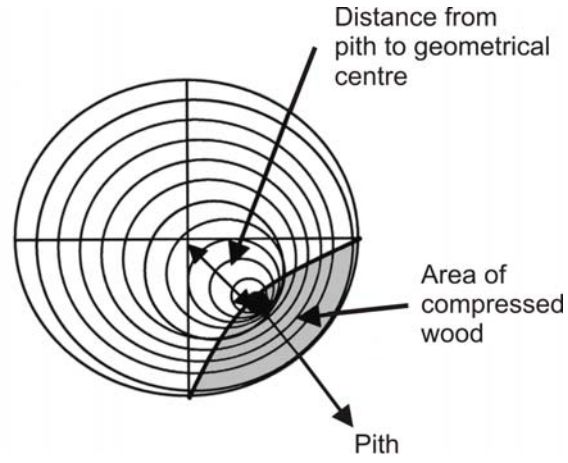

Figure 8.14 Measuring Compression Wood (the shaded area is the area of grade consideration).

A grade reduction can be made in the assessment of Interior Grade code 1 only. Normally off centre heart affects less than 2.0 metres of the log length, however, other external indicators may be present which indicate the displacement of the heart extends further in the log.

To calculate the determination of the 20% offset measure the gross diameter of the log where the defect is seen, determine the geometrical centre of that end, and measure in centimetre from the pith to that centre. That measurement divided by the gross diameter multiplied by 100 will be the percentage of the offset. Example: gross diameter is 20 rads; the measurement if 4 rads, 4 rads/20 rads x 100 = 20%.

The measurements must be taken from the section of the log that is affected or compressed. If the percentage is greater than 20% a grade consideration must be calculated.

1. Measure the area affected by the compressed area from the pith to the outside edge.

2. Decide on the length of the defect to a maximum of 2.0 metres, unless there is an indication that another length would be more suitable.

3. Calculate the volume of grade reduction for Grade 1 candidate logs only.

8.4 Applying the Principles of Grading

Grade Reduction is the process of determining what portion of a log is not suitable for the manufacture of various products. The previous section outlined the defects found in logs which reduce the amount of finished product which can be recovered from logs. These defects include:

- firmwood defects (including rot, hole, char, and missing wood), and
- non-firmwood defects (including shake, checks, frost cracks, shatter, splits, forks, catface, deadside, lightning scar, bark seams, goitre, pistol grip, sweep, and crook).

As explained in later sections, grade reduction requires that a trim allowance be applied around most defects. In addition, grade reduction must account for other volumes that are not available for manufacture. These include:

- collars of firmwood too thin to cut lumber,
- segments of slabs too thin to cut lumber,
- sound hearts that are too small in diameter, and
- the defect free portion of logs and slabs too short to cut lumber.

> Grade reduction is only used in the assessment of log grade. The firmwood contents or the net dimensions that yield the firmwood contents must always be recorded as the official British Columbia Metric Scale volume.

The volume of the log not available for the manufacture of lumber or the other products is the grade reduction volume. In applying the grading rules, the scaler must deduct this volume from the gross log volume and express the remaining volume as a percentage of the gross volume. This percentage represents the percentage of the log that can be manufactured.

$$\frac{\text{Gross Volume} - \text{Defect Volume}}{\text{Gross Volume}} \times 100 = \%\ \text{Suitable for Manufacture}$$

Determining the grade reduction volume and calculating the percentage suitable for product recovery while not difficult, can be time consuming. As scalers gain experience and complete numerous grade reduction calculations, they become proficient at estimating grade reductions.

Experienced scalers may find it necessary to perform only periodic full calculations for confirming their estimates and determining grades on borderline logs.

An experienced scaler will also follow a number of approaches to avoid needless calculations:

- they look for obvious tree characteristics which may impact the grade (e.g., excessive knots or twist will considerably narrow a logs grade potential), and
- they understand the relationship between certain defects and log size (e.g., a 2 rad surface check on a small log may have a very significant impact compared to the same check on a large log.

Initially, scalers are strongly advised to calculate all grade reductions. It is only through such a background of disciplined practice that good judgement and "log sense" will develop. While this log sense is never really lost, it can be weakened by periods of inactivity and even highly experienced scalers should periodically reconfirm their skills, especially after periods of layoff.

8.4.1 Determining Grade Reduction

Using field methods which do not account for taper (known as linear methods) will not yield the same results as methods which employ a full metric volume approach using Smalian's formula (known as volumetric method). The volumetric method is deemed to be correct and accurate.

Although characteristics are described individually, scalers must consider the whole log in determining its grade. The scaler must determine and consider the following factors:

- log size,
- whether it is a round log or a slab,
- what proportion of the log will produce lumber and chips,
- the quality of end products, and
- the presence of non-permissible defects.

8.4.2 Log Size

Potential end use and product recovery is in large part determined by each log's end diameter. Other factors being equal, larger logs will produce more and better quality lumber than smaller diameter logs. As such, grade rules specify minimum log diameter criteria.

While the official coastal grade rules are expressed as centimetres of radius, this unit is the equivalent to "radius class units" (RADS) which are expressed as "RADS of diameter". The scaling convention is that diameters are measured and recorded in RADS. For example, a recorded measurement of 5 rads is equal to 5 cm of radius for the purpose of grading.

In applying the diameter criteria, note the following:

- Unless otherwise specified, diameters are the gross diameter inside bark at the small end of the log. The gross diameter is the actual measured diameter before making any deduction for any defect and including sap rot.

- For logs which require more than one diameter measurement, the diameter for the purpose of grading is the rounded gross diameter for the small end, or top of the log. A log that rounds up to the minimum diameter for a grade qualifies for that grade.

8.4.2.1 Length

Length measurements specified in the grade rules are the actual unrounded gross measurements. Where a log meets the minimum gross length for a grade but requires a deduction, which reduces the net recorded length below the minimum, it is graded based on its gross length.

Length is a factor in log value, both in terms of efficiency in handling and lumber value potential.

Scalers use various accepted indicators at the local forest service level (local knowledge) to accurately estimate the length of defects. In cases where there are no accepted indicators by the local forest service, the conventions for estimating rot in the *Firmwood Defect and Conventions* chapter may be employed after approval by the Regional Executive Director, District Manager or Forest Officer (scaling).

8.5 Assessing Product Recovery

Grade rules require that a certain specified percentage of the gross log volume must be available for manufacture of a given product based on the grade rule. This requires the grade reduction volume to be calculated. The net log volume, available for manufacture of a given product based on the grade rule, must then be calculated and expressed as a percentage of the logs gross volume.

The official methods for calculating grade reduction are similar to those used for determining firmwood deduction. Scalers should carefully study the *Firmwood Measurement Procedures* chapter and practice these procedures on logs until they are thoroughly understood.

Except for logs with sap rot or char, which are otherwise sound, the grade reduction volume is always larger than the firmwood deduction volume. There are three reasons for this:

- there are a number of defects such as fractures, bark seams, goitre, sweep, and crook that reduce product recovery but do not cause firmwood loss,
- additional defect free volume around the allowable defects (the trim) is lost in the manufacturing process, and
- while the firmwood loss is related only to the size of the defect, the grade reduction loss is also dependent upon the orientation of the defects in the log. That is, a defect may be so positioned as to render additional log segments too short or may cause the residual collar (log shell) to be too thin for manufacture.

Log radius in the grade rules is expressed as centimetres of radius, which is equal to and interchangeable with, rads of diameter.

An exception should be noted in the grade rule for firmwood reject where the measurement is expressed in centimetres of diameter.

Potential end use and product recovery are in large part determined by each log's end diameter. Other factors being equal, larger logs will produce more and better quality lumber than smaller diameter logs.

While the official grade rules are expressed as centimetres of radius, this unit is the equivalent to "radius class units" (RADS) that are expressed as "RADS of diameter". The scaling convention is that diameters are measured and recorded in RADS. For example, a recorded measurement of 5 rads is equal to 5 cm of radius for the purpose of grading.

8.5.1 Lengths of Defects

Scalers may use a variety of accepted indicators at the local level (local knowledge) to accurately determine the lengths of defects. Scalers must be cautioned however, that conventions are only 'rules-of-thumb'. When logs are bucked shorter than 4.9 metres scalers must not, and should not automatically downgrade based on "the heart rot in one end" convention. Bucking practises must be conducted for the purpose of ensuring an accurate scale. It is the responsibility of the scaler to demonstrate how the defect length determination was made.

Experience is gained through the observation of bucking and manufacturing process. Conventions should be tested regularly to ensure they are applicable. This is demonstrated through study, training, observation and support from the scaling community in both industry and government.

Although scalers should work together to ensure a complete and accurate scale, when the Regional Executive Director, District Manager or Forest Officer (scaling) determines that a convention does not apply, they may order that its use be stopped. This will ensure that the scale data provided is accurate and complete.

8.5.2 Determining Grade Reduction for Collars (Shells)

Where logs have heart defects, the collar or shell of sound wood surrounding the defect must meet a minimum thickness requirement in order for lumber to be cut from it, according to the following specifications:

1. The minimum collar thickness specified is the actual unrounded measurement of the collar taken before trim allowance has been added to the defect,

2. For all logs scaled and graded under the Schedule of Coast Timber Grades, the minimum collar or shell thickness needed in order to produce lumber is 5 rads (10 cm). This applies to all collars surrounding internal (heart) defects such as heart rot, pocket rot, holes, ring rot, ring shake, water shake, and star check,

3. For all logs scaled and graded under the Schedule of Interior Timber Grades, the minimum outer collar thickness is 7.5 rads (15 cm) for heart rot, holes, and star checks only. For pocket rot, ring rots, ring shake and water shake the minimum collar thickness is 5 rads (10 cm).

4. Where a collar or a portion of a collar does not meet the minimum thickness requirement, the volume of the collar or portion must be included in the grade reduction. An exception is where the diameter of the defect is 20 percent or less than the diameter of the log end in which it appears. In such cases, the collar is deemed to be thick enough to cut lumber, so trim allowance is added to the defect measurement and the grade reduction is then calculated. This rule is used to prevent unreasonable down grading of smaller diameter logs with a very small core of heart rot. Only logs up to 12 rads in diameter (with 5 rad collar requirement) or logs up to 18 rads in diameter (with 7.5 rad collar requirement) are affected.

Scalers must exercise care when measuring collar thickness. They must evaluate the actual, unrounded measurements of the collar. It is tempting to simply subtract the defect diameter from the recorded log diameter and divide the difference by two, but this method of averaging the collar thickness can lead to mistaken assumptions. For example:

- on logs with excessive butt flare, this method will often considerably under-estimate the true collar thickness since the butt diameter has been reduced by callipering to compensate for the flare, but the defect is not. Experience has shown that defects usually follow the growth rings, so it is more reasonable to presume that if there is collar at the end of a log, there will still be collar at the point where the log was callipered, and

- on logs which have an off-centre defect, this method will not reflect the possibility that a portion of the log will or will not meet the grade requirement. For example, in Figure 8.13 the off-centre star shake has a portion with sufficient collar and a portion without. By averaging, a scaler may not take a grade reduction when one is required, and may take an excessive reduction when a portion of the collar actually does meet the grade requirement.

The following guidelines are used to help ensure consistency in assessing collars:

- collar thickness is obtained by direct measurement of the collar with the scale stick at the log end in which the defect appears, including flared butt logs,

- if adequate collar is found on the cut face of a flared butt log, there will be adequate collar where the butt diameter was callipered,

- where a defect runs a partial length of a log, the measured collar thickness is presumed to hold true for the entire length affected by the defect, except for cone shaped defects (butt rot),

- where a defect runs the full length of a log, the collar determination made at each end is presumed to hold true for half the length of the log, and

- where a defect is located so that merely a portion of a collar is below the minimum requirement, only that portion is considered grade reduction and added to any other grade reduction.

Collar thickness principles are provided in the Figures 8.15, 16, 17, without showing trim allowance. Trim allowance is added after any collar assessments.

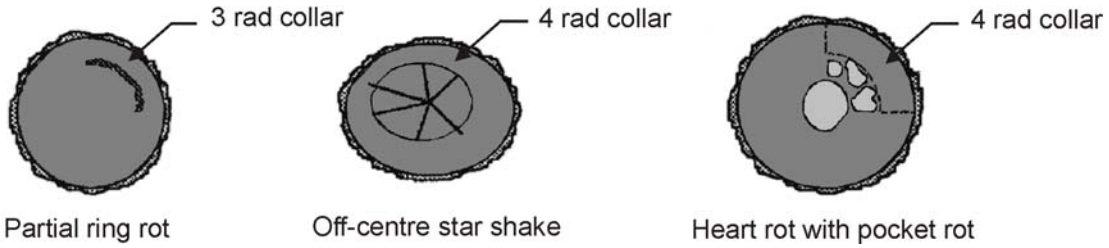

Figure 8.15 Examples of Logs with a Portion of the Collar Too Thin to Produce Lumber.

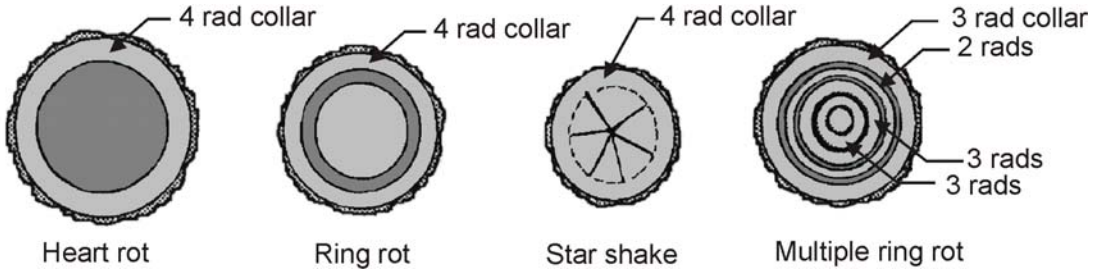

Figure 8.16 Examples of Logs with Entire Collar Too Thin to Produce Lumber.

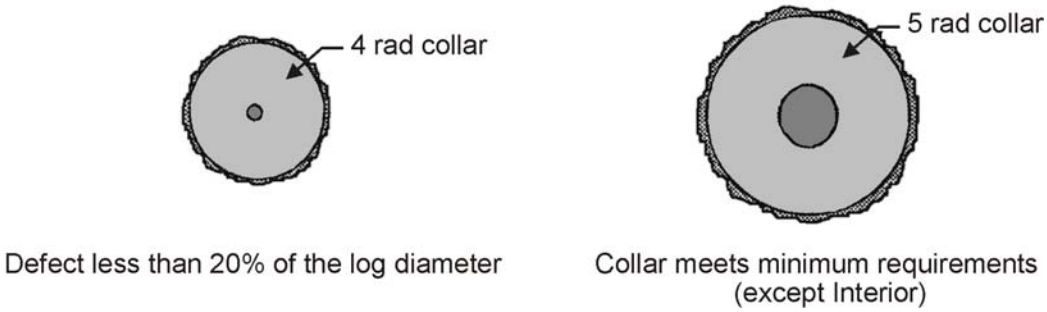

Figure 8.17 Examples of Logs with Sufficient Collar to Produce Lumber.

8.5.3 Determining Grade Reduction for Sound Hearts (Residual Cores)

Sound hearts inside defects such as sap rot, charred wood, ring rot and ring shake are considered suitable for lumber production if they are 5 rads (10 cm) or more in diameter. Hearts less than 5 rads are included in the grade reduction. The treatment of sap rot is illustrated starting on the next page.

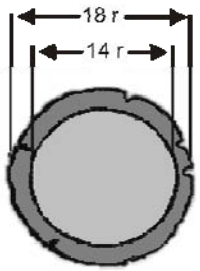

Figure 8.18 Sap Rot.

The first example here shows the end of a log with sap rot with an outer diameter of 18 rads and a residual core diameter of 14 rads. The grade reduction is the outer portion of the log for the distance the rot travels. From the scale stick:

Gross unit volume	=	UV 18 r	=	102 dm^3		
Grade reduction	=	UV 18 r – UV 14 r	=	(102 – 62)	=	40 dm^3
% of log which can be manufactured	=		=	$\frac{102-40}{102} \times 100$	=	60.8 percent

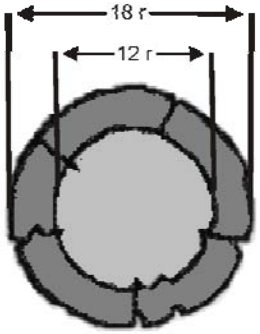

Figure 8.19 Advanced Sap Rot.

The second example shows relatively advanced sap rot with an outer diameter of 18 rads and a residual core diameter of 12 rads. Advanced sap rot like this often requires an additional firmwood adjustment to account for irregular rot penetration, and a further grade adjustment for checks that penetrate into the sound core.

From the scale stick:

Gross unit volume	=	UV 18 r	=	102 dm^3		
Grade reduction	=	UV 18 r – UV 12 r	=	102 – 45)	=	57 dm^3 per metre
% of log which can be manufactured			=	$\frac{102-57}{102} \times 100$	=	44.1 percent

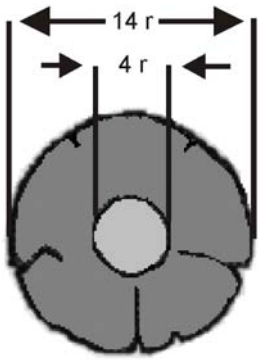

Figure 8.20 Residual Core is a Grade Reduction.

This example shows a log with sap rot which has advanced to the point where the residual core is less than 5 rads (10 cm) in diameter at the top. This log is 100 percent grade reduction for the distance the rot travels. However, if this sap rot presented at the butt end of the log, this log would Grade 'Z' based on Section 9.5.1.1(1)(c).

8.5.4 Determining Grade Reduction for Multiple Defects

Occasionally, scalers will encounter log ends with two or more defects positioned such that there is less than 5 rads (10 cm) of usable fibre available between the defects. In these situations, simply adding the trim around each defect and calculating the grade reduction would understate the recovery loss . In such cases, the available material separating the defects is also unsuitable for manufacture and is added to the grade reduction.

Area Available to Cut Lumber

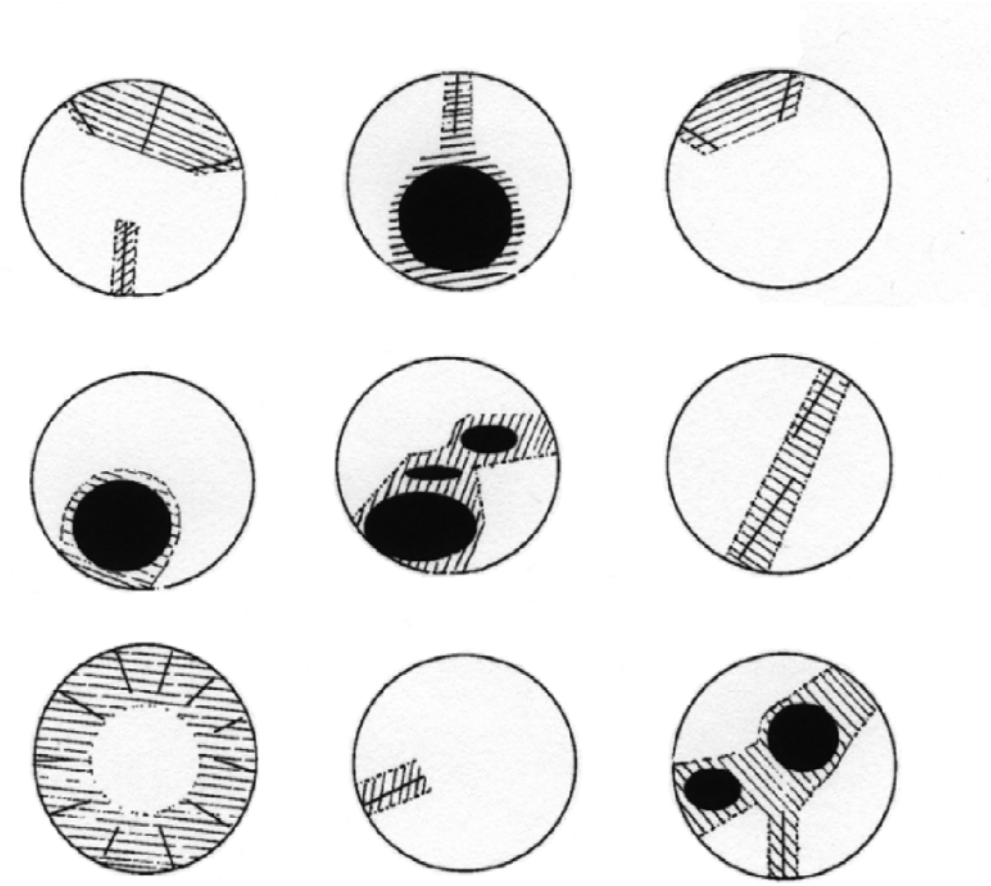

Figure 8.21 Shaded Areas are Unsuitable for the Recovery of Lumber.

The shaded areas in these examples represent the area that has been lost to defects in each illustration. When checks are in conjunction with other defects consideration must be given to the area between these defects to assess manufacturability. **The challenge for the scaler is to decide if the log has 10 cm between defects.**

8.5.5 Slab Thickness and Grading

To be considered suitable for various grades, slabs must achieve a certain minimum thickness. For interior grading, slabs or portions must be at least 7.5 rads (15 cm) thick to be considered suitable for manufacture into lumber. For the interior, portions of slabs that do not meet the minimum thickness must be assessed as grade reduction. This includes measured lineal portions since, unlike collars on round logs that can be measured only on the ends, slab thicknesses can be measured at any point along their length.

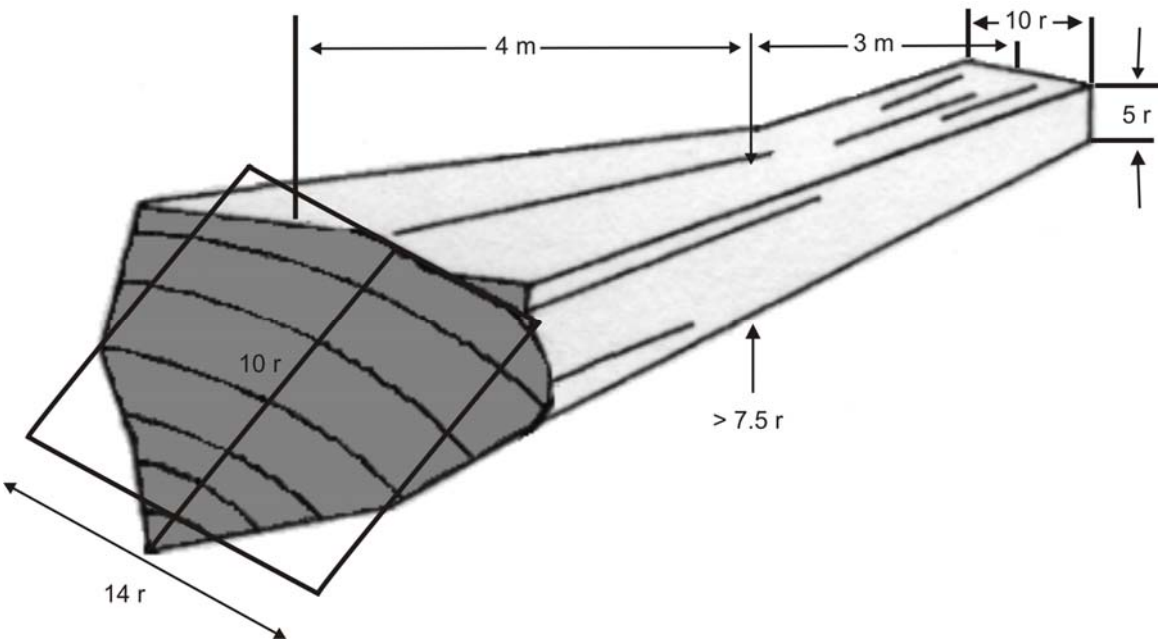

Figure 8.22 Slabs with Portions Meeting the Grade Rule.

This slab is measured for firmwood content according to the methods described in the Gross Measurements Procedures chapter, where the cut faces are enclosed in a rectangle that has an area equivalent to the slab end. The dimensions are 7 by 14 rads and 5 by 10 rads by 7 m, and an equivalent radius class unit is found for each end of the slab using the rectangular formula:

Slab Unit volume, big end	=	10 x 14 x 0.4	=	56 dm^3
Slab Unit volume, small end	=	05 x 10 x 0.4	=	20 dm^3
Average unit volume	=	(56 + 20) / 2	=	38 dm^3
Gross volume	=	38 x 7 m	=	266 dm^3

In the Interior a further calculation is necessary to account for portions of slab that are less than 7.5 rads in thickness. The portion of the slab less than 7.5 rads thick is 3 m long. The width at 3 m from the small end is 12 rads. The interior volumetric calculation is:

Unit volume @<7.5r	=	7 x 12 x 0.4	=	34
Unit volume, small end	=	5 x 10 x 0.4	=	20
Average unit volume	=	(34 + 20)/2	=	27 dm^3
Grade reduction volume	=	27 x 3m	=	81 dm^3
% of slab which can be manufactured	=	$\frac{266 - 81}{266}$ x 100	=	69.5 percent

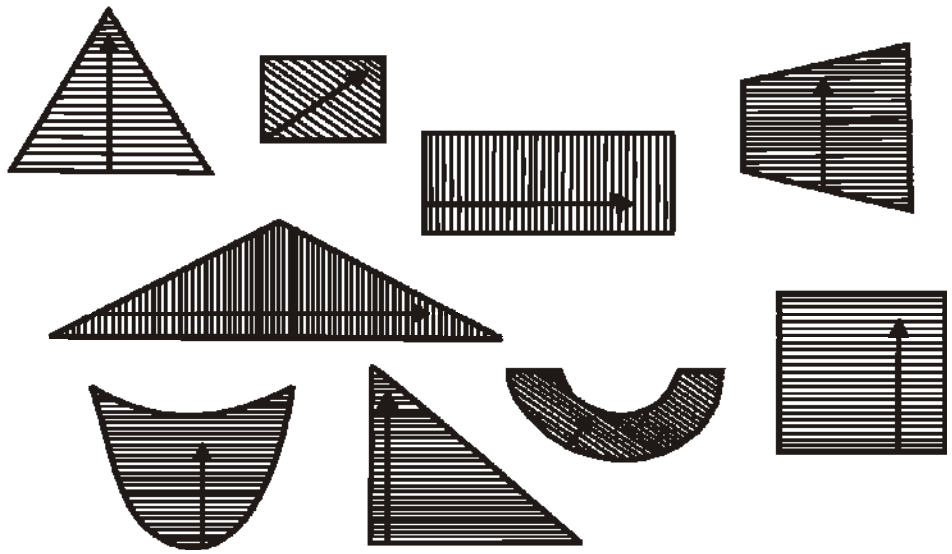

Figure 8.23 Measure Minimum Thicknesses at Right Angles to the Grain.

For grading purposes, the maximum thickness at **right angles** to the growth rings where a 2 rad board can be cut is used to determine the minimum thickness for grading purposes.

The specified minimum thicknesses in the *Schedule of Grade Rules* are the actual and unrounded measurements measured at right angle to the growth rings.

8.5.5.1 For Coastal Grades

1. Slabs are not permitted in the peeler B and C grades and the sawlog J grade.

2. Slabs must be at least 38 cm (19 rads) to qualify for classification as D, E, F, G, H, I and K grades, and meet the minimum diameter for the grade.

3. The minimum slab thicknesses for the shingle grades are specified in the grade rule for each grade.

4. To qualify for the utility U grade slabs must be at least 16 cm (8 rads) thick with a mean diameter of 8 rads, and a shape suitable for lumber manufacture.

5. To qualify for the utility X grade slabs must be at least 10 cm (5 rads) thick, meet the grade rule minimum diameter of 5 rads and have a shape suitable for lumber manufacture.

6. Slab thicknesses specified are actual unrounded measurements.

8.5.5.2 For Interior Grades

1. Slabs must be at least 20 cm thick and 20 cm in width to qualify for grade code 1.

2. 15 cm thick and 15 cm wide to qualify for grade code 2.

3. 10 cm thick and 10 cm wide to qualify for grade code 4.

4. That portion of a slab less than 10 cm in thickness qualifies for grade code Z.

8.6 Determining Trim Allowance

Trim allowance is included in the grade reduction and refers to the firmwood surrounding rot and other internal defects that are lost to lumber recovery when squaring up the areas adjacent to a defect. The standard trim allowance is 1 rad (2 cm) on all sides of the defect if the collar thickness requirements are met.

Once the trim allowance has been added, the total dimension is inserted into the appropriate formula and the individual grade losses for the measured defects are calculated. The individual losses are then added together to derive the total grade reduction.

The conventions associated with trim allowance are:

- Trim allowance is added to internal defects such as heart rot, through running butt rot, pocket rot, ring rot, ring shake, water shake, heart shake, star check, deep surface checks, and fractures.

- Trim allowance is not added to external defects such as sap rot, cat face, missing wood, shallow surface checks, sweep, crook, pistol grip, charred wood, and goitre.

- Ring rot, ring shake, and water shake are characterized by having one or more collars of firmwood, interspersed by concentric rings or partial rings of defect surrounding one central core of firmwood. Trim allowance is applied to firmwood adjacent to the defect(s) as follows:

    - where the collar outside a ring defect and the core inside are both thick enough to produce lumber, a trim allowance is added to both the collar outside of the defect and the core inside of the defect in calculating the grade reduction,

    - where a sound collar does not meet the minimum thickness required to produce lumber, trim allowance is neither added to the collar nor to the core; the entire collar is included as grade reduction, and the entire core is considered to be available for manufacture (where the residual core is at least 10 cm in diameter),

    - where a sound core does not meet the minimum diameter of 5 rads (10 cm) trim allowance is not added to the core; the entire core is included as grade reduction, and trim allowance is added to the collar surrounding the core if it meets minimum thickness requirements.

    - where both the collar(s) and core do not meet the minimum thickness required to produce lumber, the length of the log affected is included as grade reduction, and

- where there are multiple rings of defect, trim allowance is added to each collar which meets the minimum thickness required to produce lumber.

- Trim allowance is added to the collar of firmwood surrounding the core of rot in heart rot and through running butt rot if the collar meets the minimum thickness required to produce lumber.

- Trim allowance is added to all sides of pocket rot whether enclosed in a circle, square or rectangle. Where numerous pockets are separated by less than 5 rads (10 cm) of firmwood, trim allowance is added around the group of pockets and the entire area of firmwood between the pockets is included as grade reduction.

- Scattered, sporadic or multiple defects with less than 5 rads (10 cm) between defects must be enclosed in the appropriate shape with trim allowance added only if collar/core requirements are met. Areas of firmwood between defects that are less than 5 rads (10 cm) are included in the grade reduction.

- Trim allowance is added to both sides of single shakes, deep checks, and fractures. If they are irregular, the total width of the irregularity is determined and the trim allowance added to it.

- Star shakes and multiple deep surface checks are trimmed out in their entirety. The average diameter of a circle or ellipse to just enclose the star check or to just exclude the deep surface checks is used to determine the grade reduction.

- Spiral checks are trimmed out in their entirety. The amount of twist in the check is observed or calculated over a given length.

The following figures demonstrate the principles of trim allowance in calculating grade reductions.

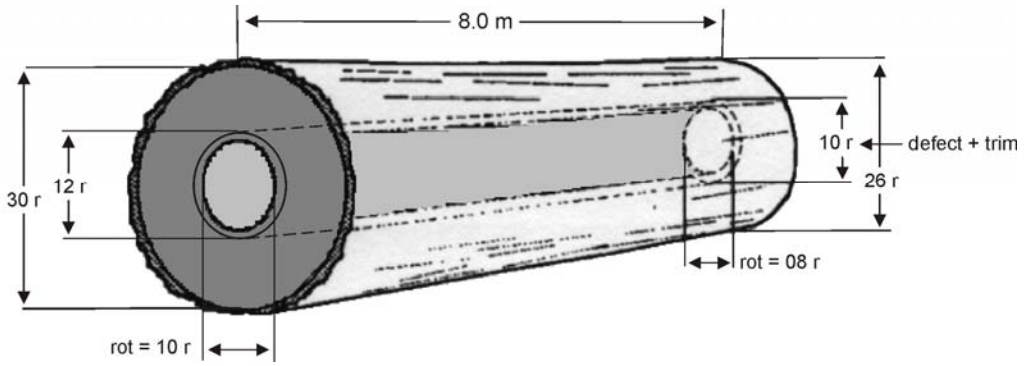

Figure 8.24 The Application of Trim Allowance Around Heart Rot and Hole.

This first log has a rot diameter of 8 rads at the top and 10 rads at the butt. The grade reduction will be for a 10 rad top defect and a 12 rad butt defect after the 1 rad trim allowance is added around the defect. From the scale stick:

Gross volume	=	8 m/26 r/30 r	=	(849 + 1131)	=	1980 dm^3
Grade reduction	=	8 m/10 r/12 r	=	(126 + 181)	=	307 dm^3
% of log which can be manufactured			=	$\frac{1980 - 307}{1980} \times 100$	=	84.5 percent

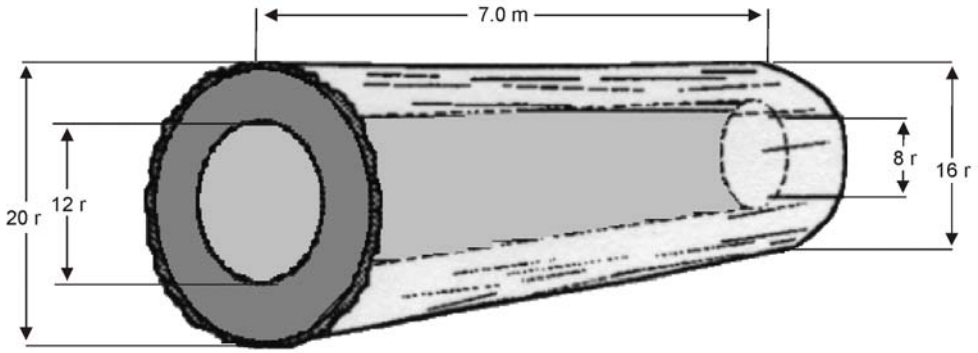

Figure 8.25 Collar Too Thin to Cut Lumber.

This example in Figure 8.25 has a collar thinner than the 5 rad minimum thickness requirement so the entire log is grade reduction. It is unnecessary to add trim allowance.

> Collar thickness is always measured exclusive of trim

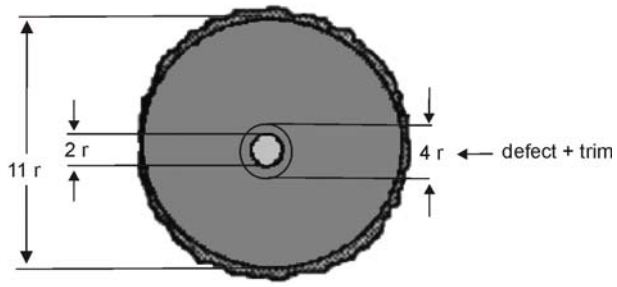

Figure 8.26 Trim and the Twenty Percent Rule.

An exception to the grade rule is this example in Figure 8.24. It has a heart defect diameter not more than 20 percent of end log diameter (2 rads divided by 11 rads times 100 = 18 percent) and the residual collar is less than 5 rads thick. If the heart defect is not more than 20 percent of the end diameter, collar thickness is not considered and trim allowance is added. Therefore, in this example, the grade reduction per metre of length from the scale stick is:

Gross volume per metre (11 r)	=	Unit volume: log	=	38 dm^3
Grade reduction per metre (04 r)	=	Unit volume: defect	=	5 dm^3
% of log which can be manufactured	=	$\frac{38 - 05}{38} \times 100$	=	86.8 percent

8.6.1 The Application of Trim Allowance for Butt Rots

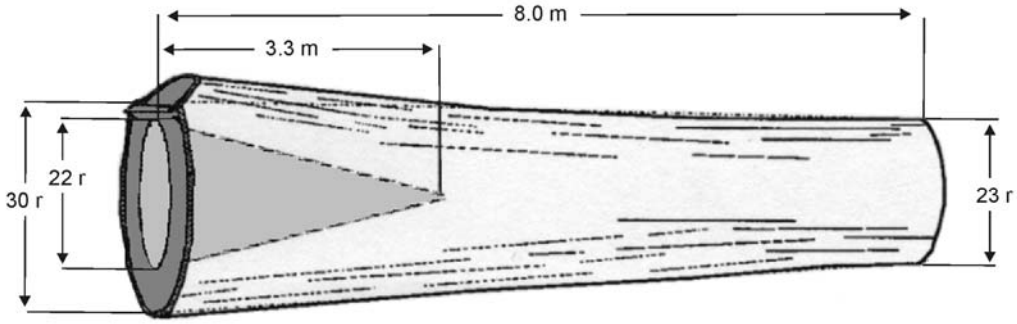

A log with simple butt rot estimated to penetrate 3.3 metres into the log (22 x 0.15 = 3.3m).

Figure 8.27 Simple Butt Rot.

Figure 8.27 is the exception to the convention of adding trim allowance to a collar of firmwood. Because conical butt rot has a much more variable and complex effect on grade reduction, a number of approaches to a reasonable solution have been tested. Of those methods, doubling the firmwood deduction is a reliable and simple convention, which allows for both trim allowance and minimum collar requirements.

With the scale stick:

Gross volume	=	8 m/23 r/30 r	=	(665 + 1131)	=	1796 dm^3
Cone volume	=	3.3 m/22 r	=	$\frac{(251+251)}{3}$	=	167 dm^3
Grade reduction	=	167 x 2	=	334 dm^3		
% of log which can be manufactured			=	$\frac{1796-334}{1796}$ x 100	=	81.4 percent

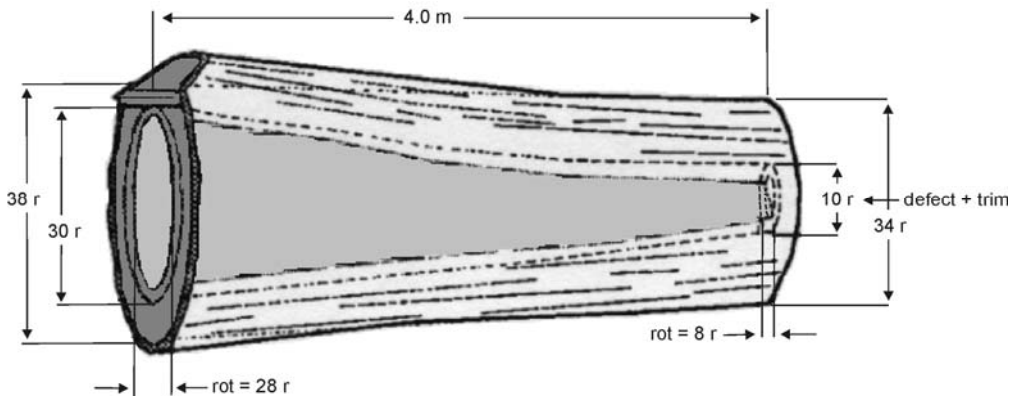

Figure 8.28 Through Running Butt Rot.

The second example of butt rot in Figure 8.28 follows the standard convention for adding trim allowance because the butt rot takes the form of heart rot. However, in the case of through running butt rot with the rot diameter at the butt more than 1.5 times the rot diameter at the top, an overstatement of the grade reduction may result from summing the half volumes or from finding the average unit volume. And, because of the neiloid or "golf tee" shape of the rot in this example, the grade reduction may be based on the average of the two diameters, which is nearer to the true volume of the defect. If the shape of the rot is presumed to be a frustum of a cone, it is necessary to increase the average diameter. If the shape is presumed to be parabolic or "bullet" shape, half volumes or average unit volumes may be used. See the example in the Measurements chapter showing a volume deduction for conoid through running butt rot. In this example, it is assumed that the collar is thick enough to cut lumber. Where the collar does not meet the minimum thickness, the lineal portion of the log without collar must be included as grade reduction. The collar thickness is determined by actual measurement. It is not half the difference between the projected butt diameter and the defect diameter.

From the scale stick:

Gross volume = 4 m/34 r/38 r = (726 + 907) = 1633 dm^3

Average defect diameter = $\frac{10+30}{2}$ = 20 rads

Grade reduction = 4 m/20 r/20 r = (251 + 251) = 502 dm^3

% of log which can be manufactured = $\frac{1633 - 502}{1633} \times 100$ = 69.3 percent

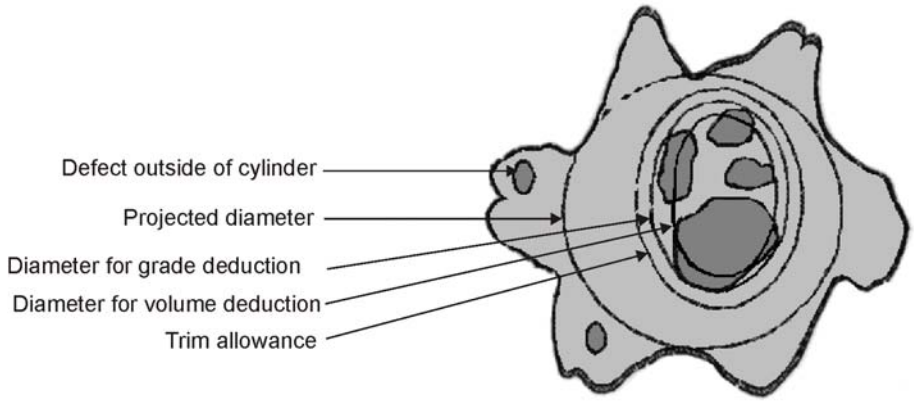

Figure 8.29 Irregular Butt Defects in a Fluted Butt Log.

The third example in Figure 8.29 shows scattered butt rot. Irregular or sporadic rot and water shake and those with defect extending into the collar will require a significantly larger initial measurement (before adding trim) than what would be used for a firmwood deduction. The illustration includes the following relationships:

- any defects outside of the gross butt diameter (projected butt diameter) are not considered for either firmwood deduction or grade reduction, although these defects may serve to indicate the severity of a butt defect. i.e. the distance it penetrates up the log,
- the grade reduction diameter is increased to include all the rot and other defect within the cutting cylinder that affects lumber recovery,
- trim allowance is added to the diameter for grade reduction in through running butt rot, and
- when two or more defects are positioned such that there is less than 5 rads (10 cm) of usable fibre available between the defects, the available material separating the defects is also unsuitable for manufacture and is included in the grade reduction.

8.6.2 Trim Allowance and Ring Shake

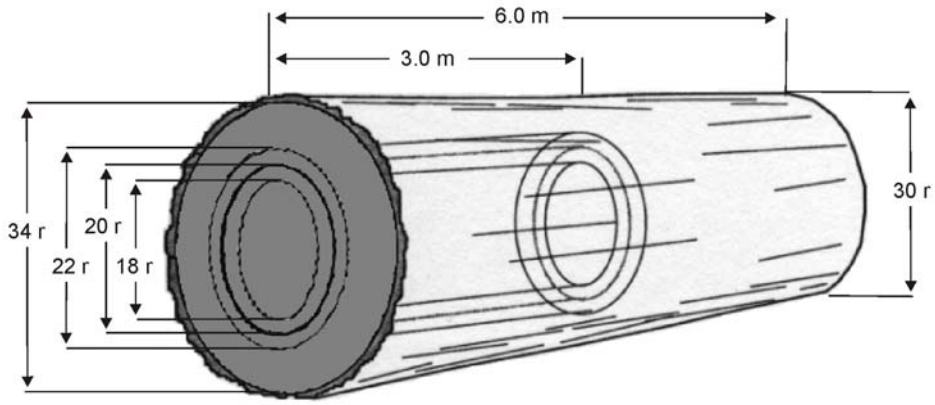

Figure 8.30 Ring Shake and Both Collar and Core are Thick Enough to Produce Lumber.

The example in this figure shows a log with ring shake that is estimated to penetrate one-half of the log length. Because the collar meets the minimum collar requirements, add a 1 rad trim allowance on both sides of the shake and deduct the volume of a 2 rad ring.

From the scale stick:

Gross volume	=	6 m/30 r/34 r	=	(848 + 1090)	=	1938 dm^3
Grade reduction	=	UV 22 r - UV 18 r for 3 m		(152 - 102) x 3	=	150 dm^3
% of log which can be manufactured			=	$\frac{1938-150}{1938}$ x 100	=	92.3 percent

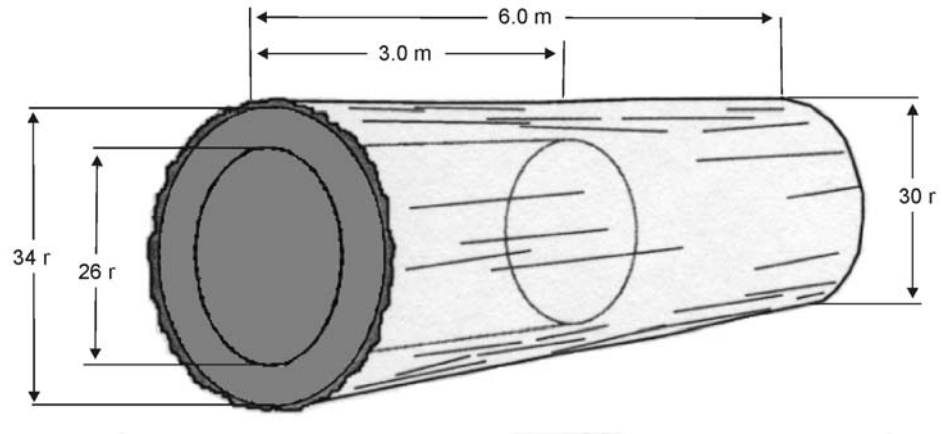

Figure 8.31 Ring Shake and Only the Core is Thick Enough to Produce Lumber.

Figure 8.29 shows a log with the same gross dimensions as the first log, but the ring shake is positioned so that the collar of firmwood is less than the minimum thickness requirement of 5 rads. Because the entire collar is a grade reduction, the entire core is considered suitable for recovery, and no trim allowance is added.

From the scale stick:

Gross volume	=	6 m/30 r/34 r	=	(848 + 1090)	=	1938 dm^3
Grade reduction	=	UV 34 r - UV 26 r for 3 m	=	(363 - 212) x 3	=	453 dm^3
% of log which can be manufactured			=	$\frac{1938 - 453}{1938} \times 100$	=	76.6 percent

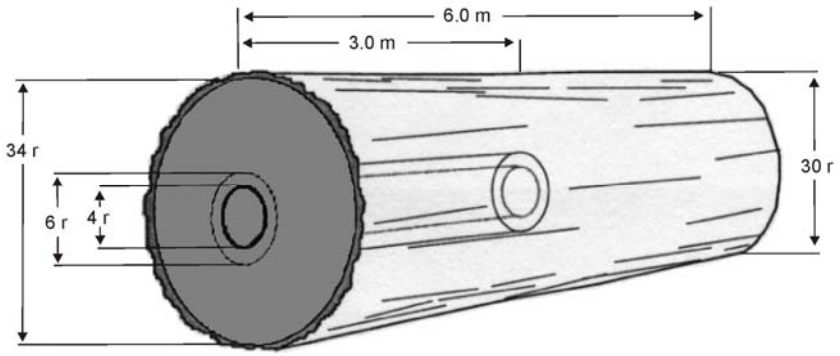

Figure 8.32 Ring Shake and Only the Collar is Thick Enough to Produce Lumber.

This example shows a log with the same gross dimensions as the first two examples but the core of firmwood is less than the minimum core thickness of 5 rads (10 cm). Because the core is a grade reduction, trim allowance is added only to the collar.

From the scale stick:

Gross volume	=	6 m/30 r/34 r	=	(848 + 1090)	=	1938 dm^3
Grade reduction	=	3 m/6 r/6 r	=	(17 + 17)	=	34 dm^3
% of log which can be manufactured			=	$\frac{1938 - 34}{1938} \times 100$	=	98.2 percent

8.6.3 Trim Allowance and Ring Rot

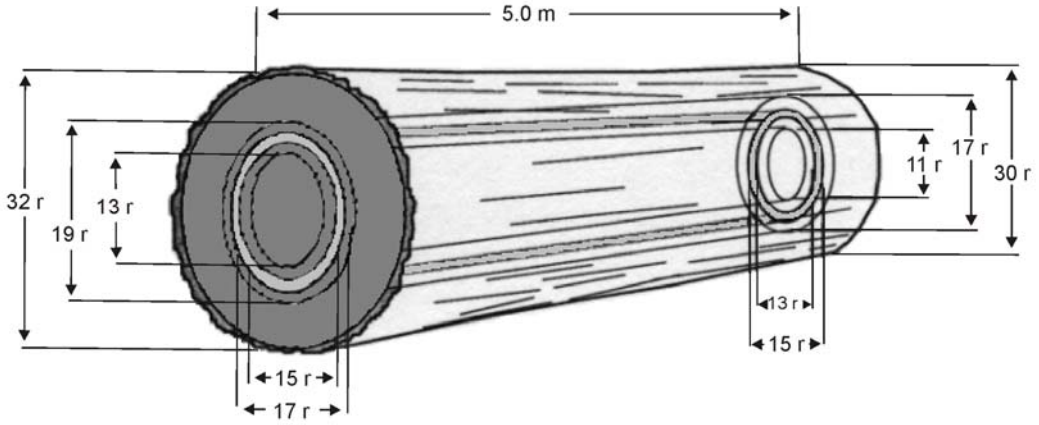

Figure 8.33 Both Core and Collar Meet the Grade Rule.

The figure above shows a log with 1 rad of ring rot penetrating the full length and circumference of the log. Because both the collar and the residual core meet minimum thickness requirements, trim allowance is added to both the collar and the core.

From the scale stick:

Gross volume	=	5 m/30r/32 r = (707 + 804)		=	1511 dm^3
Grade reduction	=	Outside cylinder 5 m/17 r/19 r		=	(227 +284) = 511 dm^3
less	=	Inside cylinder 5 m/11 r/13 r		=	(95 + 133) = 228 dm^3
	=	(511 - 228)	= 283 dm^3		
% of log which can be manufactured			$= \frac{1511 - 283}{1511} x100$	=	81.3 percent

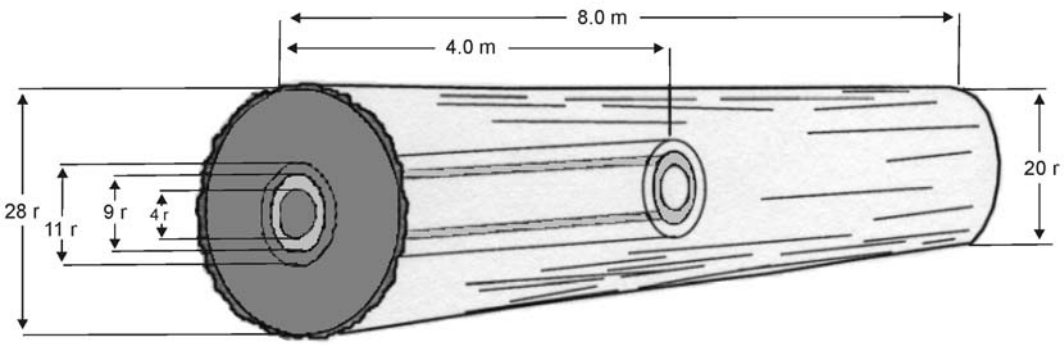

Figure 8.34 Only the Collar Meets the Grade Rules.

This example in Figure 8.34 shows a log where the sound heart is only 4 rads, which is less than the 5 rads (10 cm) required to cut lumber. Because the entire core is a grade reduction, trim allowance is added only to the collar.

With the scale stick:

Gross volume	=	8 m/20 r/28 r	=	(503 + 985)	=	1488 dm^3
Grade reduction	=	4 m/11 r/11 r	=	(76 + 76)	=	152 dm^3
% of log which can be manufactured			=	$\frac{1488-152}{1488} \times 100$	=	89.8 percent

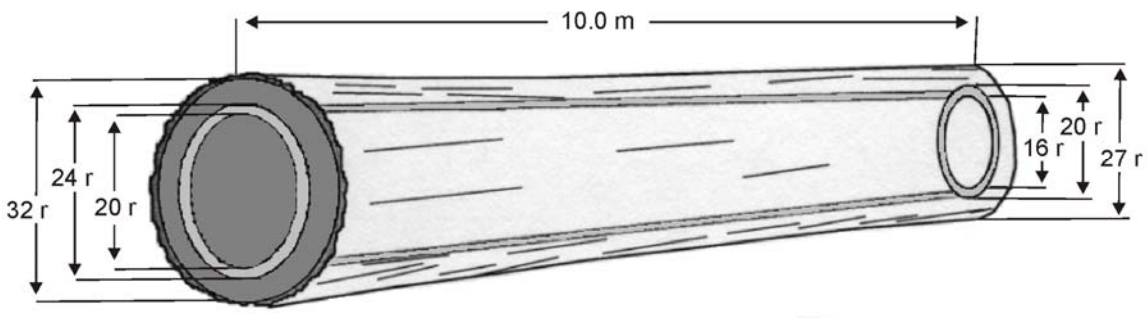

Figure 8.35 Only the Core Meets the Grade Rule.

This example in Figure 8.35 shows a log where the sound collar is less than the minimum thickness required to cut lumber. Trim allowance is not added to either the collar or the core; the entire collar is grade reduction and the entire core is available for manufacture (when it is 5 rads or more in diameter).

From the scale stick:

Gross volume	=	10 m/27 r/32 r	=	(1145 + 1608)	=	2753 dm^3
Volume available	=	10 m/16 r/20 r	=	(402 + 628)	=	1030 dm^3
Grade reduction	=	2753 – 1030	=	1723 dm^3		
% of log which can be manufactured			=	$\frac{2753-1723}{2753} \times 100$	=	37.4 percent

8.6.4 Trim Allowance and Multiple Ring Rot

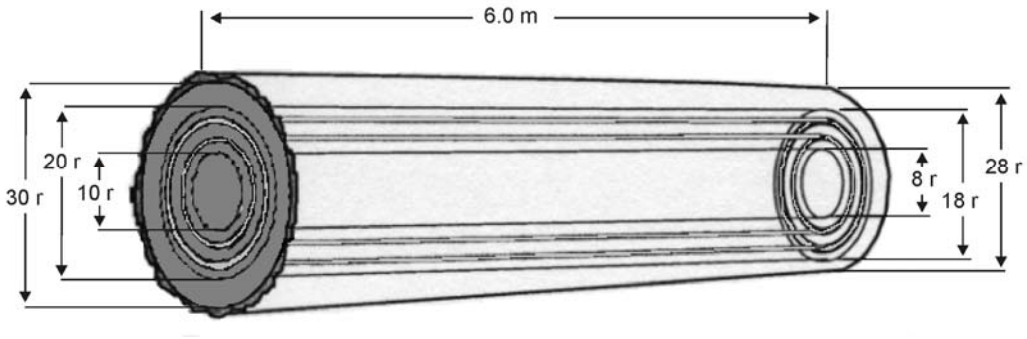

Figure 8.36 Muliple Ring Rot and the Firmwood Between Rings is Less Than 5 Rads.

This example shows a log with two 1 rad rings of rot penetrating the full length and circumference of the log. Because both the collar and the residual core meet minimum thickness requirements, trim allowance is added to both the outer collar and the core, but the residual collar between the two rings does not meet the requirements, and it is grade reduction. If the outer collar and core also did not meet the minimum requirements, the whole log would be grade reduction.

From the scale stick:

Gross volume	=	6 m/28 r/30 r	=	(739 + 848)	=	1587 dm^3
Grade reduction	=	Outside cylinder 6 m/18 r/20 r = (305 + 377)			=	682 dm^3
less	=	Inside cylinder 6 m/08 r/10 r = (60 + 94)			=	154 dm^3
	=	(682 - 154)	=	528 dm^3		
% of log which can be manufactured			=	$\frac{1587-528}{1587} \times 100$	=	66.7 percent

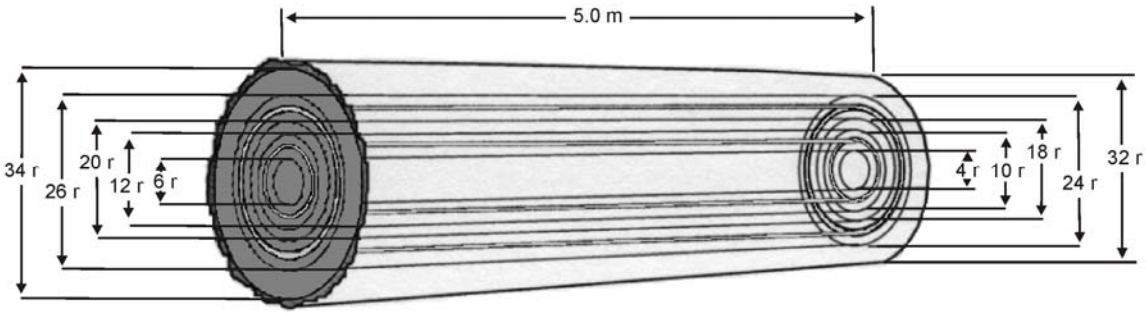

Figure 8.37 Multiple Ring Rot and the Firmwood Between Rings is 5 Rads or More.

The example above shows a log with two 1 rad rings of rot penetrating the full length and circumference of the log. Because both collars and the residual core meet minimum thickness requirements, trim allowance is added to both collars and the core. Although the number of dimensions shown in this example appears to represent a complex situation, there is only one extra step involved, and as with calculating the firmwood deduction, the work is done progressively, from the outside ring to the inside ring.

From the scale stick:

Gross volume	=	5 m/32 r/34 r	=	(804 + 908)	=	1712 dm^3

Outside ring:

Grade reduction	=	Outer cylinder 5 m/24 r/26 r = (452 + 531)			=	983 dm^3
less	=	Inner cylinder 5 m/18 r/20 r = (254 + 314)			=	568 dm^3
	=	(983 - 568)	=	415 dm^3		

Inside ring:

Grade reduction	=	Outer cylinder 5 m/10 r/12 r = (79 + 113)			=	192 dm^3
less	=	Inner cylinder 5 m/04 r/06 r = (13 + 28)			=	41 dm^3
	=	(192 - 41)	=	151 dm^3		
Sum of grade reduction			=	(415 + 151)	=	566 dm^3
% of log which can be manufactured			=	$\frac{1712 - 566}{1712} x100$	=	66.9 percent

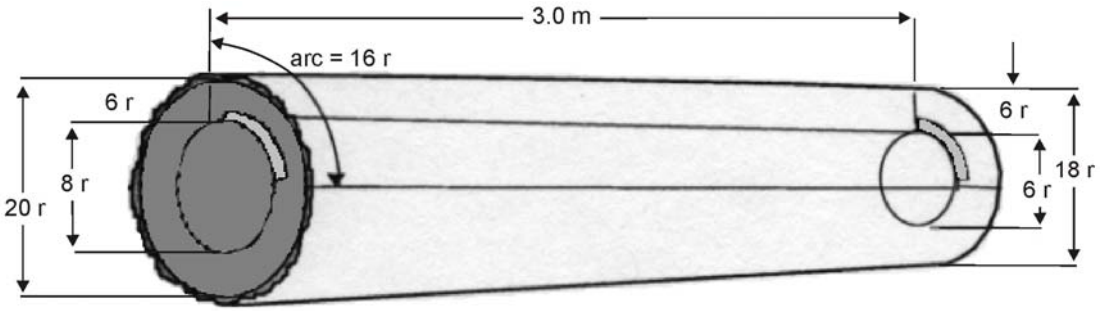

Figure 8.38 Partial Ring Rot 2 Rads Thick.

The example above shows a log with a partial ring of rot penetrating the full length and 1/4 of the circumference of the log. Because the collar does not meet the interior minimum thickness requirement, the entire portion of collar between the ring rot and the bark is grade reduction, and the entire core is available for manufacture. As with firmwood deductions, a factor is applied to obtain the net grade reduction. This factor may be easily visualized, if it is in simple fractions such as 1/4, 1/3, and 1/2. It can be calculated as a ratio of the circumference by multiplying the diameter by the factor and dividing the result into the arc of the defective sector, but finding the arc is not practical with conventional scaling tools, so an acceptable alternative may be used. Degree of arc is one option, using a watch or compass dial to learn to visualize sectors which are not obvious divisions of 360 degrees.

Factor from formal calculation:

Radius times π	=	20 *x* 3.14159	=	63 r circumference
Defect arc factor	=	16 r arc ÷ 63	=	1/4 or 0.25 or 25 percent

Factor from a clock face, major divisions in 12ths (secondary divisions in minutes or 60ths, which are equal to 6 degrees/minute):

Position of hands	=	12:00 to 3:00	=	15 minutes
Defect arc factor	=	15 divided by 60	=	0.25 or 25 percent

Factor from arc

Position from North	=	90 degrees		
Defect arc factor	=	90 divided by 360	=	0.25 or 25 percent

There are several incremental options available to the scaler just from these two common objects, and of course, that which is most comfortable and familiar is preferred, even a piece of paper, which may be easily and accurately folded into 16ths.

From the scale stick:

Gross volume	=	3 m/18 r/20 r	=	(153 + 188)	=	341 dm^3
less	=	Inside cylinder 3 m/06 r/08 r/ = (17 + 30)			=	47 dm^3
Grade reduction	=	341 – 47	=	294 *x* factor of 0.25	=	73.5 = 74 dm^3
% of log which can be manufactured			=	$\frac{341-32}{341} \times 100$	=	78.3 percent

If a scaler encounters rot which does not penetrate the full length of the log, and indicators do not support the convention that it penetrates exactly 1/2 way, the use of unit volumes rather than half volumes is convenient. For example, with an assumption that the rot penetrates only 1.2 m in from the large end, from the scale stick:

Gross volume	=	3 m/18 r/20 r/	=	153 + 188)	=	341 dm^3
Grade reduction	=	UV log (20 r) - UV core (8 r) x factor (.25)			x	length (1.2)
	=	126 - 20) x 0.25 x 1.2 = 106 x 0.25 x 1.2			=	32 dm^3
% of log which can be manufactured			=	$\frac{341-32}{341} \times 100$	=	90.6 percent

8.6.5 Application of Trim Allowance to Checks and Shake

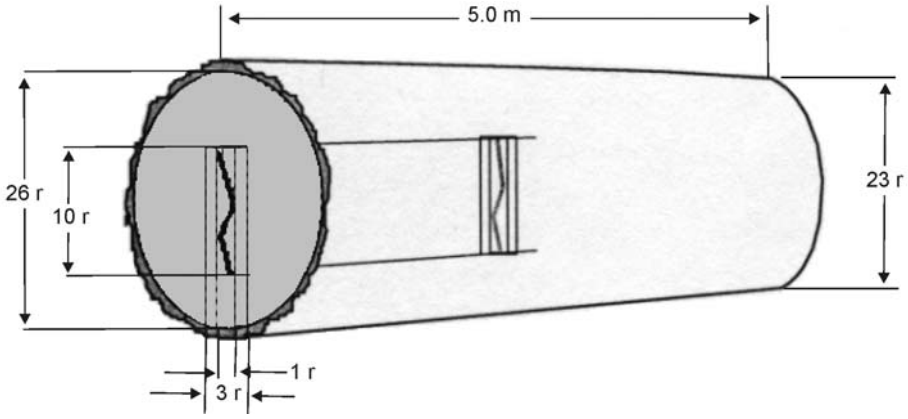

Figure 8.39 Irregular Heart Check.

This log illustrates an irregular heart check estimated to penetrate one-half the length of the log. Because the check is not straight, the area affected is enclosed, and in this case a 1 rad "box" will just contain it. Trim allowance is then added to both sides of the area enclosing the check, so that the grade reduction is for a rectangle 3 rads by 10 rads by 2.5 m. Two common ways of finding the result are described below, depending on scaler preference. The first uses a factor of 0.4 to convert "square rads" times metres to cubic decimetres as follows:

From the scale stick:

Gross volume = 5 m/23 r/26 r/ = (415 + 531) = 946 dm^3

Grade reduction = 3 r x 10 r x factor of 0.4 x 2.5 m

= 3 x 10 x 0.4 x 2.5 = 12 x 2.5 = 30 dm^3

Another popular method to find the grade reduction for rectangular defects is to use centimetres for the width and height of the defect (6 cm by 20 cm by 2.5 m), convert the measurements to decimetres, (cm/10 and m x 10) and calculate the example as follows:

Grade reduction = 6/10 dm by 20/10 dm by 25 dm

= 0.6 x 2 x 25 = 30 dm^3

Either method will produce the same results:

% of log which can be manufactured = $\frac{946-30}{946} \times 100$ = 96.8 percent

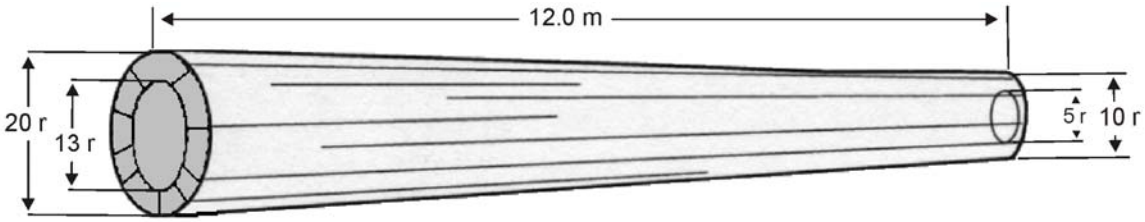

Figure 8.40 Extensive Surface Checking.

This log illustrates multiple deep surface checks that cover the entire log, with the penetration clearly visible on the ends of the log. Here it is estimated that the recoverable core of the log is equal to a 5 rad by 13 rad log 12 m long, after excluding the area affected by the checks.

From the scale stick:

Gross volume	=	12 m/10 r /20 r	=	(188 + 754)		942 dm^3
Volume available	=	12 m/5 r/13 r	=	(47 + 319)	=	366 dm^3
Grade reduction	=	942 – 366	=	576 dm^3		
% of log which can be manufactured			=	$\frac{942-576}{942} \times 100$	=	38.8 percent

Figure 8.41 Trim Allowance for Check and Split in Relation to Collars.

This example shows four log ends, each with one straight separation, located at different points on the log. Trim allowance is added according to the following conventions:

1. Log "a." has a straight surface check running to the heart. Trim allowance is added to both sides of the check.

2. In log "b.", a heart check runs out at a point less than 5 rads from the bark. Trim allowance is added to both sides of the check and extended to the bark to include the affected portion of collar in the grade reduction.

3. In log "c.", a heart check runs out at a point 5 rads or more from the bark. Trim allowance is added only to the sides of it.

4. In log "d", a split bisects the collar less than 5 rads from the bark. Trim allowance is not added to the split, and the entire segment outside of it is grade reduction.

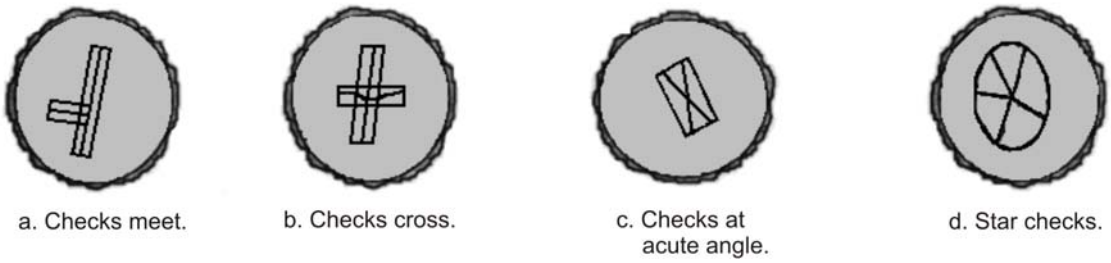

Figure 8.42 Trim Allowance for Multiple Heart Check.

This example shows four log ends with multiple heart check. It is necessary to apply trim allowance in a manner which best accommodates the forms which the check takes. Two conventions allow for the full range of heart checks.

1. Logs "a." and "b." both have two straight heart checks that meet or cross each other, and they are at more or less right angles to each other. It is apparent from this form of separation that it is possible to "square up" around them by adding trim allowance individually to each one.

2. Log "c" also has two straight checks, but they are at too extreme of an angle to each other to consider adding trim allowance to each one. Log "d" has a star check, which is characterized by having more than four points that are asymmetric to each other. In this form of check, trim allowance is added by encircling them, (in a circle or ellipse), because it is not practical to cut lumber from around each one. Depending on the size of the log and the arms of the star check however, it may be possible to cut lumber from between them where any adjoining arms are 5 rads or greater apart. In these cases, the grade reduction should be decreased.

8.6.6 Application of Trim Allowance to Off Centre and Overlapping Defect

Although the two examples below are completely different types of defect, they are treated in a very similar manner to each other, when a heart defect extends into a portion

of a collar. The only difference between the two is in the application of trim allowance, as described in the example calculations.

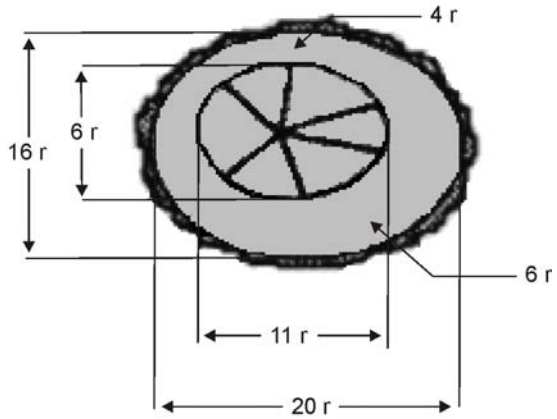

Figure 8.43 The Application of Trim Allowance to Off Centre Defects.

The example above shows the end of a fir log which has grown with an off-centre heart. Typical of this type of log, the defect radiating from the pith is also off centre, and one-half of the collar is too thin to produce lumber (coast). Since there are too many arms to add an allowance to each one, the affected area is completely enclosed in a circle or ellipse. The first grade reduction is for the star check for the distance it is estimated to travel.

From the scale stick:

Gross unit volume	=	UV 18 r	=	102 dm^3		
Grade reduction	=	(6 + 11)/2	=	UV 08 r	=	20 dm^3
Net unit volume	=	102 – 20	=	82 dm^3		

The second grade reduction is for the collar which is less than 5 rads thick for 1/2 the circumference (based on the net unit volume from the first calculation to avoid duplication of the overlapping grade reductions):

Grade reduction	=	82 x 0.5	=	41 dm^3		
Total reduction	=	41 + 20	=	61 dm^3		
% of log which can be manufactured			=	$\frac{102 - 61}{102} x 100$	=	40.2 percent

This example also demonstrates the need to go through the calculations to achieve and maintain proficiency. At first glance, a scaler may decide that this log was 100 percent grade reduction, but because the defect is offset, it is not.

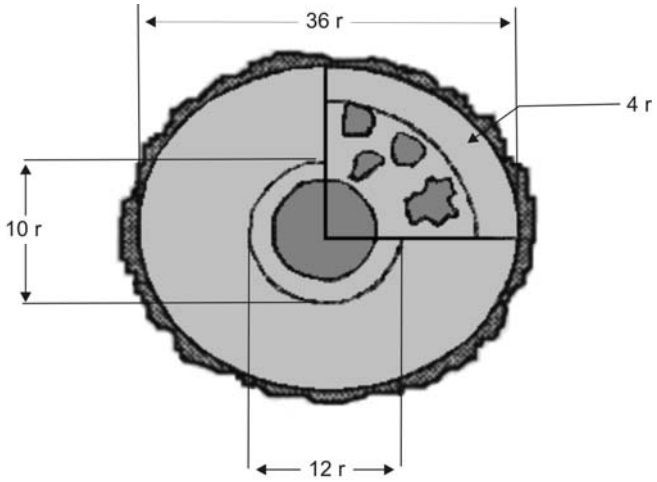

Figure 8.44 The Application of Trim Allowance to Overlapping Defects.

This example shows a log which has a rotten core and scattered pocket rot with less than 5 rads separation between the pockets. The entire area enclosing the pockets is grade reduction, and because the pockets are closer than 5 rads of the bark, the collar is 100 percent grade reduction. Trim allowance is added to the core of rot and to the area enclosed by the pockets. From the scale stick:

The first grade reduction is for the rotten core:

Gross unit volume	=	UV 36 r	=	407 dm^3
Grade reduction	=	UV 12 r	=	45 dm^3
Net unit volume	=	407 – 45	=	362 dm^3

The second grade reduction is for the collar which is less than 5 rads thick for 1/4 the circumference (based on the net unit volume from the first calculation to avoid duplication of the overlapping grade reductions):

Grade reduction	=	362 x 0.25	=	90 dm^3
Total reduction	=	45 + 90	=	135 dm^3
% of log which can be manufactured	=	$\frac{407-135}{407} \times 100$	=	66.8 percent

8.6.7 Determining Grade Reduction for Spiral Checks

Where spiral checks occur, the scaler must "block out" the portion of the log affected by a check to calculate the grade reduction. No trim allowance is added to spiral checks.

In field application, this is normally a visual estimate. The scaler can easily assess the lumber loss due to a spiral crack by observing the deviation from a straight line over the length of the log. For example, if a surface check penetrating to the heart follows the spiral grain from "12 o'clock" at one end to "3 o'clock" at the other, the deviation is 3/12, or 25 percent of the log's circumference for the length of the check. The length of a log is important in calculating grade reduction: Logs less than 5 m long are assessed over their entire length. Logs 5 m and longer are assessed on 2.5 m segments.

If a spiral surface check does not penetrate all the way into the heart, the grade reduction is of course less than for a full check, and it is important to understand the relationship between the depth of penetration and the effect on volume. For example, a check penetrating halfway to the heart would have 75 percent of the effect of a full check, because 75 percent of the volume of any round log is contained in the outer half of its radius.

The following examples show the effect of spiral check and heart check on grade reduction for short and long logs, and ways of calculating grade reduction.

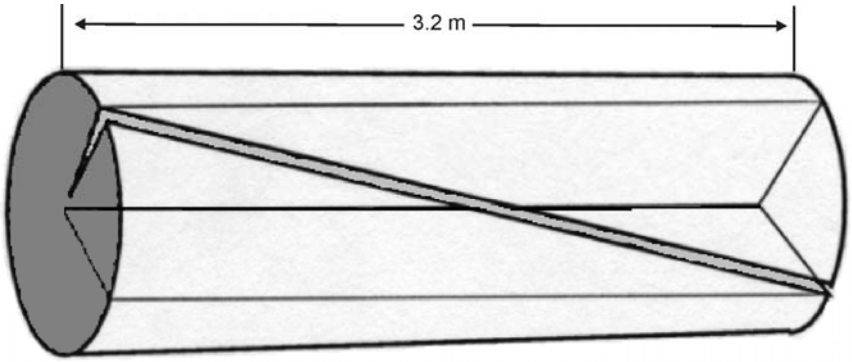

Figure 8.45 Logs Shorter Than 5 Metres are Assessed on Their Length.

The first log shows a uniform spiral check running its full length. Because the log is less than 5 m long, assess the twist on the log length. In field practice, it is only necessary to observe the degree of spiral from one end to the other and estimating the percentage of the log affected, in this case 25 percent of its circumference. Therefore, the grade reduction on the log is also 25 percent.

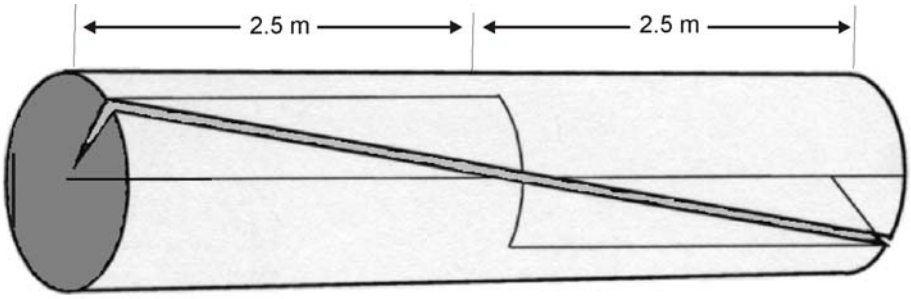

Figure 8.46 Logs 5 Metres and Longer are Assessed in 2.5 Metre Segments.

The second figure shown here also has a uniform spiral check running its full length and affecting 25 percent of its circumference. If a 25 percent grade reduction was taken, however, it is too severe for logs of this length or longer, because lumber recovery is gauged on 2.5 m minimum lengths. Therefore, the log is visually segregated into two segments, each with a 12.5 percent grade reduction.

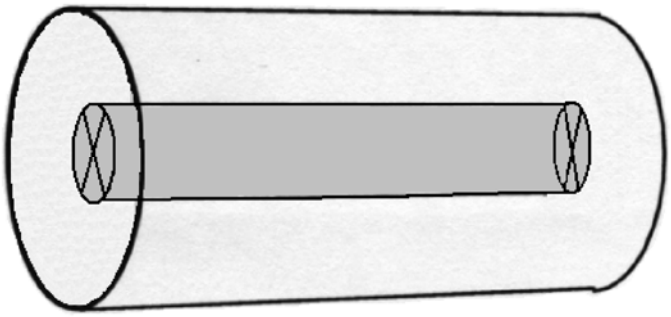

Figure 8.47 Log with Spiral Heart Check.

This log shows a spiral heart check. It may be treated similarly to acute or irregular heart check, as shown in the examples except that trim allowance is not added. That is, the grain deflection is projected to the opposite end of the log, the area affected is enclosed in a circle, and the grade reduction calculated from that.

8.6.8 Determining Lengths for Grading Purposes – Logs and Log Segments

Logs and slabs must be at least 2.5 m long to produce lumber. Logs, slabs, and chunks shorter than 2.5 m are considered to be 100 percent grade reduction. In most instances, the portion of the log's length that is 5 rads (10 cm) or more in diameter is the basis for its grade.

Some situations, however, require the scaler to deem the log to be another length for the purpose of establishing its grade. Where timber has been cut into lengths less than 2.5 m (interior) or 5.2 m (coast); for the purpose of grading they may be deemed to be 2.5 m (interior) or 5.2 m (coast) long if:

- the portion of a log cut from the top of a tree exceeds 5 rads (10 cm) in diameter and the log displays a cut face on the butt end, or
- the log is scaled after it has been bucked at the scale site, or
- if a scaler is instructed under the Scaling Regulation to use deemed lengths for the purpose of grading.

In all instances, breakage is always graded on the basis of its actual length (breakage is defined as any piece, meeting the minimum diameter of the cutting authority, which is shorter than 2.5 m in length and broken at the large end or at both ends).

> For reporting purposes, the actual net length of a log is always recorded on the tally sheet, not the deemed length.

In general, deemed lengths are used in scaling short pieces for two purposes:

- they help to ensure that scaling is consistent with the merchantability specifications, and
- they facilitate more consistent grading decisions.

The following figures demonstrate examples of the principles of length determination for calculating grade reduction in scaling, including situations where short logs are deemed to be another length for purposes of grading.

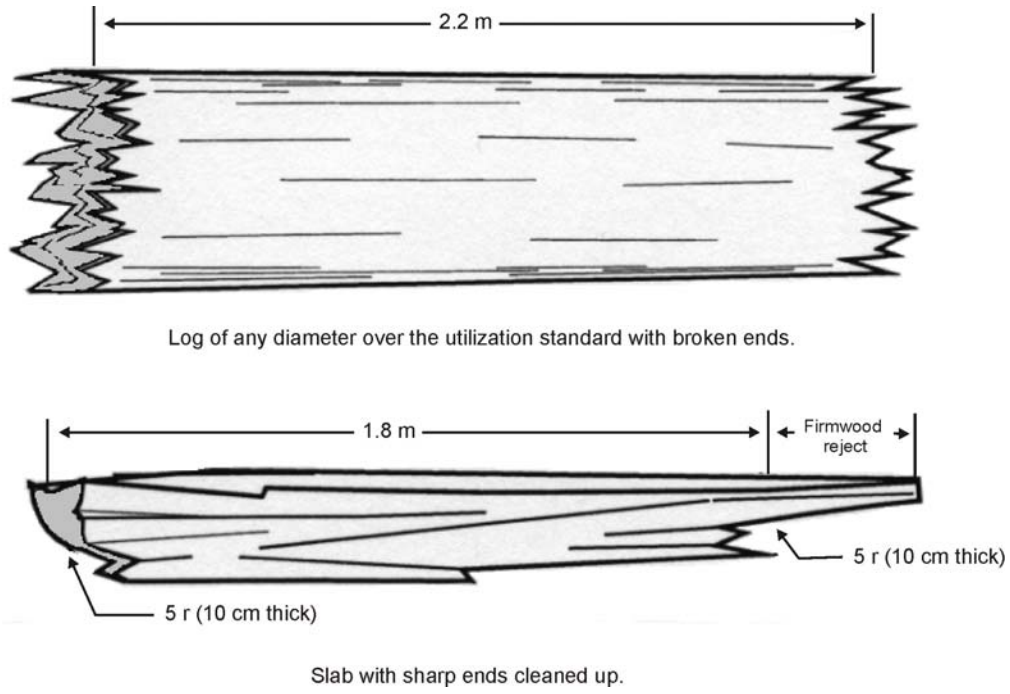

Figure 8.48 Short Breakage Pieces Contained in a Conventional Load.

These logs show two examples of breakage which are graded on the basis that the log length available to cut lumber is less than 2.5 m. These pieces are considered to be normal breakage. If they were broken subsequent to delivery, however, they would be deemed to be 2.5 m (interior), and 5.2 m (coast) for the purpose of grading, excluding the firmwood reject portions.

In breakage, log ends may or may not be "cleaned up" when they arrive at a scale site. It is shown in the second example that the sharp ends have been bucked off for obvious safety reasons, and is most often apparent to the scaler because some signs of breakage are usually showing, such as splits, pulled bark and remaining shatter. Therefore, when assessing these logs, if evidence of breakage is apparent, they are graded on the basis of actual length.

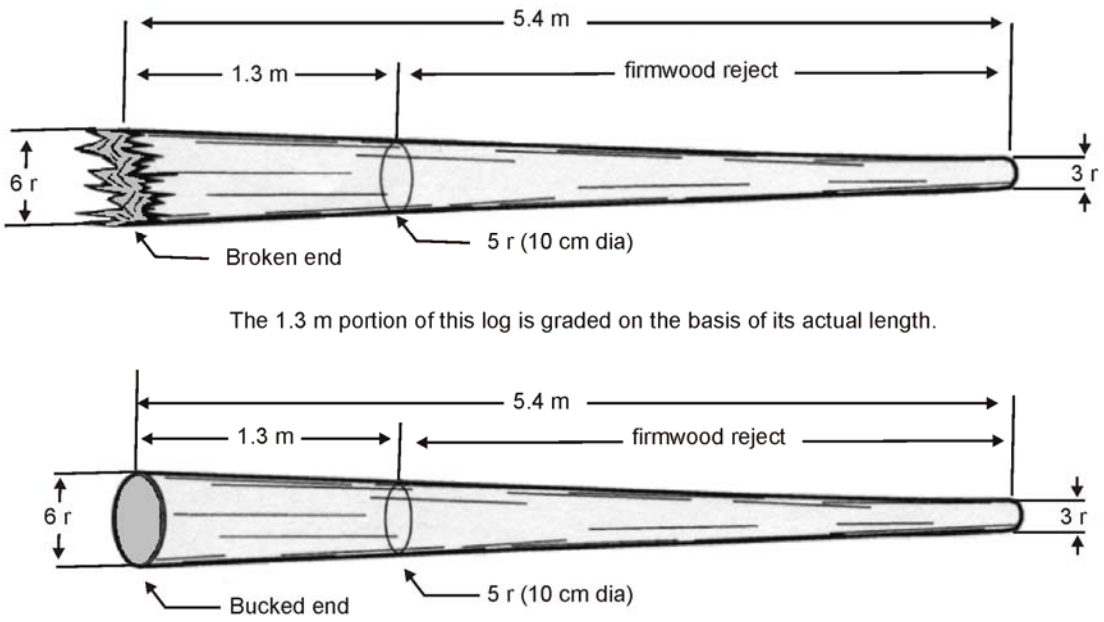

Figure 8.49 Rat Tail Tops Delivered with a Short Segment Over 10 cm.

The example above shows two similar "rat tail" logs which were delivered to a scale site. For both logs, the portion of the log less than 5 rads (10 cm) in diameter is graded as firmwood reject. The portions of the logs 5 rads (10 cm) and larger , however, are treated differently for grading purposes because one log is normal breakage, and the other is "bucking waste"; it should have been bucked at the point where the log became 5 rads (10 cm) in diameter.

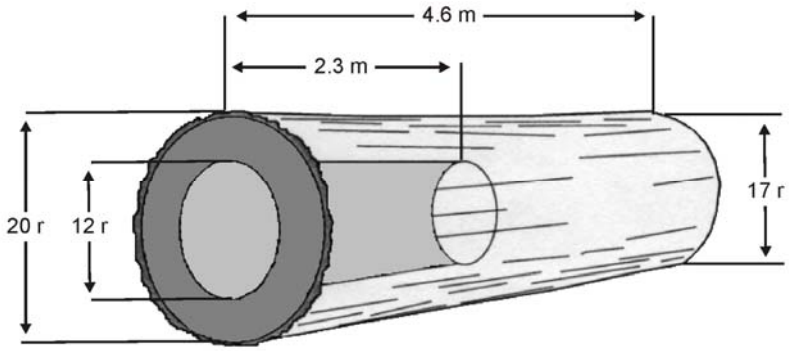

Figure 8.50 Assessing Grade in Log with Severe Heart Rot and Residual Length is Too Short to Cut Lumber.

The log above has severe heart rot that is estimated to travel for half the length of the log. The 4 rad collar is too thin to cut lumber, and a normal grade reduction is made to include the rotten heartwood and the sound collar. That is, the gross volume attributable to the rotten end is a 100 percent grade reduction for 2.3 m. The other half of the log is sound but is shorter than the 2.5 m required for manufacture, so it must also be included as 100 percent grade reduction for 2.3 m. As a result, the entire log is 100 percent grade reduction.

Although the following calculations are unnecessary in field practice, they are shown to illustrate the principle of a cumulative grade reduction.

The first grade reduction is the heart rot for one-half the length of the log:

Gross volume	=	17 r/20 r/4.6 m	=	(209 + 289)	=	498 dm^3
Grade reduction	=	12 r/12 r/2.3 m	=	(52 + 52)	=	104 dm^3

The second grade reduction is the collar which is too thin to produce lumber:

Grade reduction	=	UV 20 r - UV 12 r x 2.3 m	=	126 - 45) x 2.3
	=	81 x 2.3	=	186 dm^3

The third grade reduction is the sound half of the log that is too short to produce lumber:

Grade reduction	=	UV 17 r x 2.3 m	=	91 x 2.3)	=	209 dm^3

The three grade reductions are totalled and the percentage of the log available for manufacture is calculated:

Total Grade reduction = 104 + 186 + 209 = 499 dm^3

(Rounding conventions and log taper result in a total grade reduction of 1 dm3 more than the gross volume of the log, and because the grade reduction cannot exceed the gross volume, it is made equal to the gross volume).

$$\% \text{ of log which can be manufactured} = \frac{498 - 498}{498} \times 100 = 0 \text{ percent}$$

In field practice, significantly different results can be expected from cumulative grade reductions among scalers, depending on method. Although in most cases, the actual grade of a log will not be affected, the assessment of borderline logs can become a concern, particularly in performance checks. The fault does not lie with the scaler, but in the suitability of the available methods to the size and shape of a particular log. Because grading is quite subjective, just as the determination of firmwood loss is, more emphasis should be placed on the actual grade classification by the scaler and the reasoning behind the grade call, rather than technicalities.

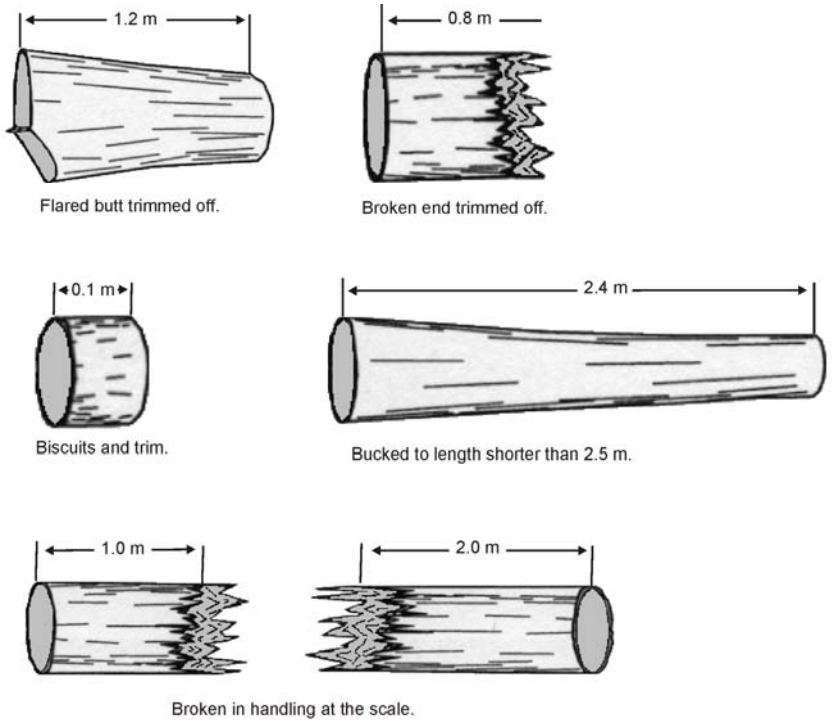

Figure 8.51 Examples of Short Logs Left After Bucking at the Scale Site and Deemed to be 2.5 m Long (Interior) and 5.2 m Long (Coast).

The examples on the previous page illustrate a number of instances of short logs left after handling and bucking at the scale site prior to scaling. For grading purposes, these logs are all deemed to be 2.5 m long in the interior and 5.2 m long on the coast, even though

the recorded measurements are as shown in the examples. That is, they may not be down-graded because they are shorter than the minimum requirements.

Where unscaled timber is bucked and delivered to a scale site or bucked at the scale site for the purpose of manufacturing special forest products prior to scaling, the timber is to be scaled and graded as logs. The classification and scaling of special forest products are described in the chapter of the same name in this manual. Figure 8.52 below provides examples of different logs which were bucked to specific lengths to suit the specifications of the product, but do not have special forest product status. Therefore, just as with other logs and chunks shorter than 2.5 m long for grading purposes, they are deemed to be 2.5 m long in the interior and 5.2 m long on the coast.

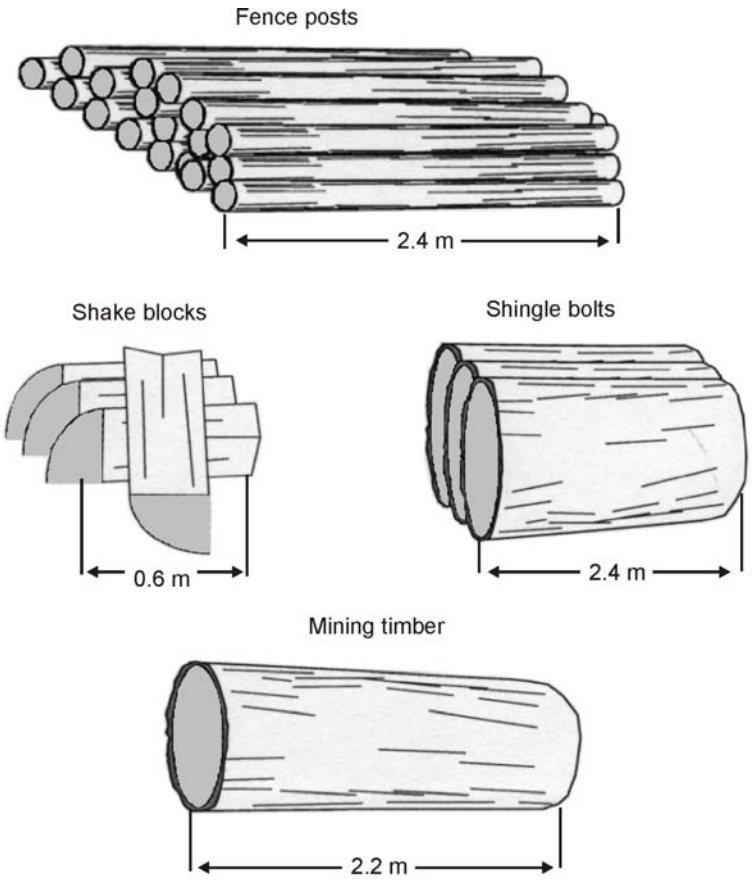

Figure 8.52 Example of Logs Cut to Special Forest Product Lengths but Not Classified as Such and Deemed to be 2.5 m Long (Interior) and 5.2 m Long (Coast).

8.6.9 Assessing Grade in Logs with Crook, Pistol Grip and Sweep

8.6.9.1 Crook

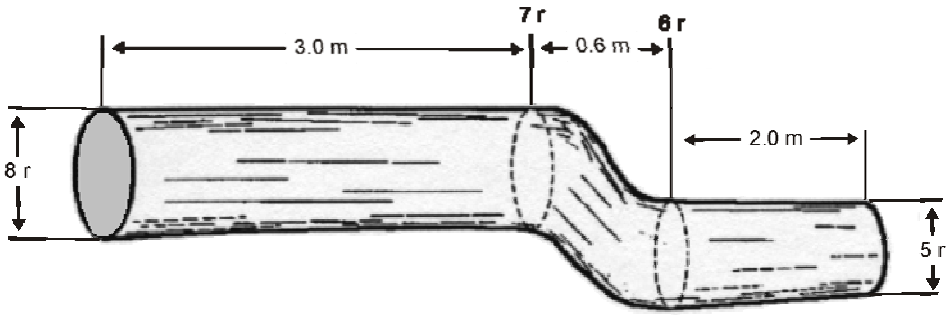

Figure 8.53 Visually Bucking a Log with Crook to Assess Lumber Recovery.

The first log in this section is a log with severe crook near the top end of the log. The crook is grade reduction because that portion is not straight enough to recover lumber. The portion above the crook is also grade reduction because it is too short to cut lumber, so the log is 100 percent grade reduction for 2.6 m.

8.6.9.2 Pistol Grip

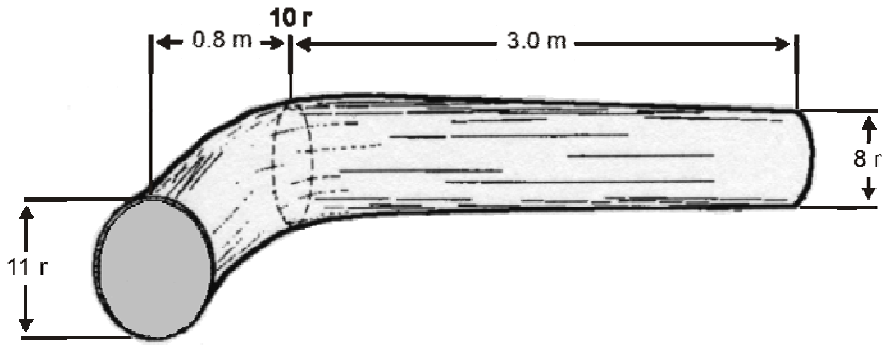

Figure 8.54 Visually Bucking a Log with Pistol Grip to Assess Lumber Recovery.

The pistol grip in this example affects 0.8 m of the butt end of the log and because this section is too short to manufacture lumber, it is a 100 percent grade reduction for 0.8 m.

8.6.9.3 Sweep

For logs affected by sweep, the scaler should assess the percentage that is available to cut 2.5 m of lumber that is straight enough. An example of straight enough lumber is based on the NLGA (National Lumber Grading Authority) requirements that would allow a minimum warp.

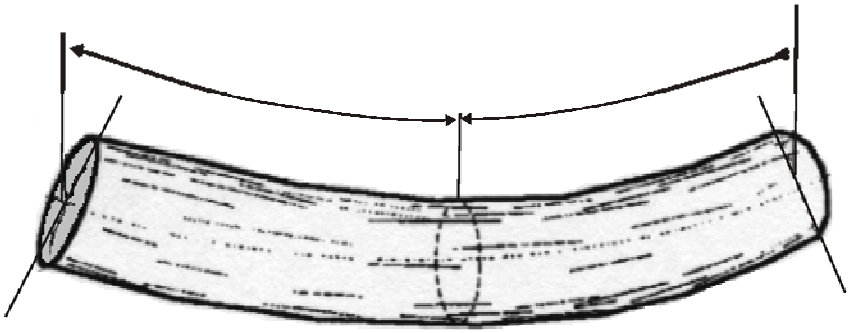

Figure 8.55 Visually Bucking a Log with Sweep to Assess Lumber Recovery.

The log shown here has severe sweep that is uniform throughout the length of the log. If this log was bucked at its mid-point, the sweep would be reduced and it would produce two logs of adequate length. The log would be suitable to produce a portion straight enough to cut lumber and milling losses would be minimized.

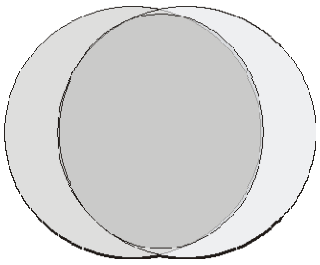

Figure 8.56 An Ellipse Shape is Created When Sweep Misaligns the Two Ends of a Log.

When considered from the end, the area available to cut lumber from a log shows as an elliptical shape. The darker shade shows what portion is available to cut lumber.

This ellipse can be calculated using the following formula:

Width (cm) x Height (cm) x (π/4)

8.6.9.3.1 Measuring the Sweep

The following is the procedure to measure the offset:

Lay a tape straight on the log from the top centre to the butt centre of the log.

Find the geometric centre of the affected section.

Measure the distance between the tape and the geometric centre of the affected segment.

This procedure can be repeated vertically or horizontally for logs affected by more than one sweep. The example below shows a loggers tape being positioned at the geometric centre point of each log end. The geometric centre of the log at midpoint is then determined. Measure from that geometric centre to the tape edge with a scale stick to establish the offset in rads.

8.6.9.3.2 Simplified Method

The following calculation methods will provide you with accurate percentages, however they may be somewhat onerous in a field situation. In recognition of the difficulty with multiple calculations, simplified methods have been provided.

A comparable method is:

Midpoint – Offset/Midpoint (or top measurement if ≤ 2.5m) x 100 = % available to cut.

Midpoint diameter (or **top** on logs or segments 2.5 m in length) – offset = width and height.

Using the example shown in Figure 8.5.7 this becomes:

20 – 5 = 15 width and height

Using these numbers, the simplified formula becomes:

$$\frac{15}{20} \times 100 = 75\ \%$$

This example shows a 2.5 metre log with an 18 rad top and 19 rad butt. The measured offset is 4 rads.

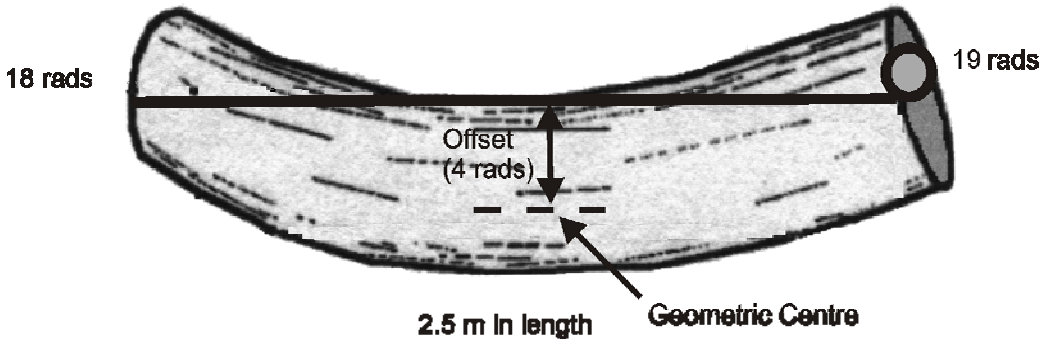

Figure 8.57 Measuring the Offset for 2.5 m Log.

8.6.9.3.3 Section/Segment Less Than 2.5 Metres

For this calculation the width is equal to the height minus the offset. The height is equal to the small end in rads. This formula is then divided by the area of the small end times the length of the log in decimetres. Multiply that product by 100 to convert to the percentage available to cut lumber.

* All value have been converted to decimetres or square decimetres.

$$\frac{\text{Width (dm)} \times \text{Height (dm)} \times (\pi/4) \times \text{length (dm)}}{\text{Small End Area (dm}^2) \times \text{length (dm)}} \times 100 = \% \text{ available}$$

Small End (rads) - Offset (rads) = Width (rads)

For example in Figure 8.5.6:

18 rads - 4 rads offset = 14 rads (28 **cm**) = 2.8 **dm** Width

18 rads (36 **cm**) = 3.6 **dm** Height

Area of small end = 18 x 18 x 3.141592 (π) = 1018 cm2 = 10.2 dm^2

2.5 **m** = 25 **dm**

Using these values the formula becomes:

$$\frac{2.8 \times 3.6 \times (.7854) \times 25}{10.2 \times 25} \times 100 = 77.6\ \%$$

8.6.9.3.4 Logs 2.5 Metres to 4.9 Metres

There is a difference in the formula for sweep on logs between 2.5 m. and 4.9 m. The midpoint area is used for this length rather than the small end. The formula becomes:

$$\frac{\text{Width (dm) x Height (dm) x } (\pi/4) \text{ x length (dm)}}{\text{Midpoint Area (dm}^2\text{) x length (dm)}} \text{ x 100 = \% available}$$

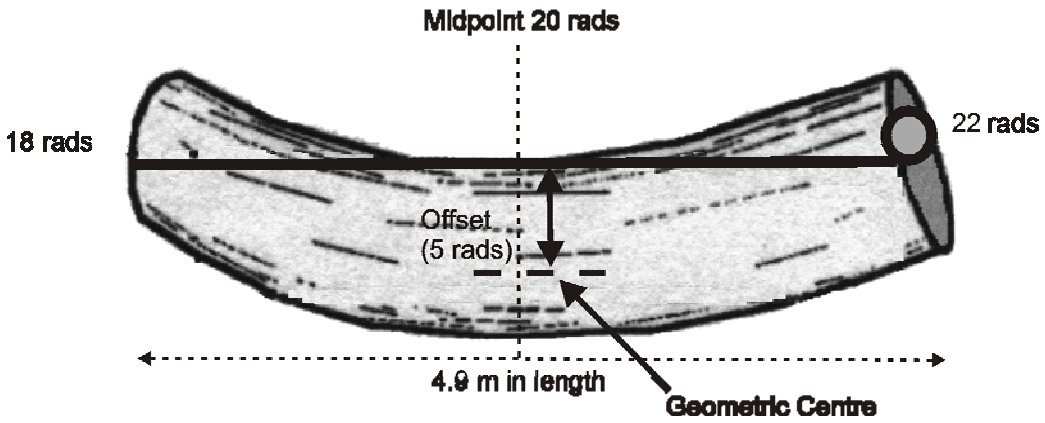

Figure 8.58 Measuring the Offset of Logs 2.5 m to 4.9 m.

20 rads - 5 rads offset = 15 rads (30 cm) = 3.0 dm **Width**

20 rads (40 cm) =4.0 dm **Height**

Area of midpoint = 20 x 20 x 3.141592 (π) = 1256 cm2 = 12.5 dm^2

4.9 m = 49 dm **length**

Using the values in this example the formula becomes:

$$\frac{3.0 \text{ x } 4.0 \text{ x } .7854 \text{ x } 49}{12.5 \text{ x } 49} \text{ x 100 = 75.4 \%}$$

8.6.9.3.5 Sweep Calculation Summary:

- For 2.5 m section, small end – offset = width
- For 2.5 m to 4.9 m log, mid point - offset = width
- Volume of ellipse/ gross volume x 100

Interior Grading 9

9.1 Interpreting the Schedule of Interior Timber Grades

The Schedule of Interior Timber Grades is part of the *Scaling Regulation*. It is comprised of five grades: firmwood reject code Z, undersized code 6, premium sawlog code 1, sawlog code 2 and lumber reject code 4.

9.1.1 Grade Applicability

Timber must be classified by grade in accordance with the Schedule of Interior Timber Grades. If timber is cut in a forest region (usually Northern and Southern Interior) or part of a forest region where the policies and procedures, approved by the minister under the Act, specify that log selling prices must be used to determine the rates of stumpage applicable to the timber, then those policies will apply.

> It is the area of harvest and not the place of scaling which determines the schedule of timber grades that must be used.

9.1.2 Grade Precedence

- The Grade precedence is also part of the Scaling Regulation. For this reason scalers are instructed to record a log against the first grade in order of presentation in the Scaling Regulation.
- As per the Scaling Regulation, where a log meets the criteria of more than one grade, the following grade precedence must be applied.
- A log or portion of a log that qualifies as Firmwood Reject (Grade code Z) takes precedence over all other grades.
- A log that qualifies as Undersized Log Grade (Grade code 6) takes precedence over premium sawlog, sawlog and lumber reject. (Grades code 1, 2 and 4).
- A log that qualifies as a Premium Sawlog (Grade code 1) takes precedence over Sawlog and Lumber Reject. (Grades code 2 and 4).
- A log that qualifies as a Sawlog (Grade code 2) takes precedence over Lumber Reject. (Grade code 4).

9.1.3 Identifying Undersized Logs in the Interior

When scaling interior timber, scalers must assign an undersized grade to logs which are cut from trees which are smaller than the diameter measured outside the bark at a point 15 cm (7.5 rads) from the butt end on candidate logs.

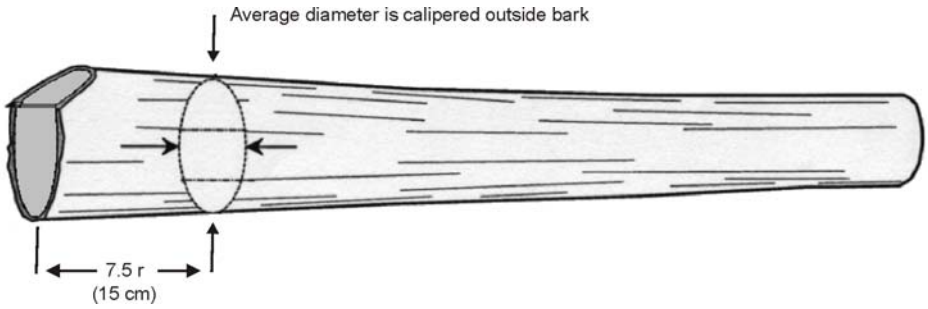

Figure 9.1 Measuring Diameter for Interior Undersize Grade.

To be considered for the undersized grade:

- A log must show sufficient evidence such as an undercut, butt flare, feller buncher cut, thick bark or other butt characteristics to indicate it comprises a tree and not a top cut or long butted log, and
- the outside bark measurement (averaged) at a point 15 cm from the butt face must be less than the minimum diameter specified.
- If the undercut portion or feller buncher cut of a log has been removed, it cannot be classified as an undersized log.
- Scalers are to use minimum of 15 cm (7.5 rads) for lodgepole pine and 20 cm (10 rads) for all other species.

> If there is no evidence a log was cut from an undersized tree, it must not be graded as Grade 6.

9.2 Physical Characteristics Affecting Log Grades

Some aspects of the factors affecting log grades have been explained in the Timber Grading chapter, while others require further explanation specific to interior grading.

9.2.1 Compression Wood

This is a consideration for Grade Code 1 timber only. See Section 8.3.2.6 for a detailed discussion of compression wood and its effects on merchantable timber.

9.2.2 Checks

Checks over 4 cm in depth are a non-allowable defect for Grade code 1 logs. See Section 8.3.1.1 for more information on grading for checks.

9.2.3 Procedures for Assessing Checks under the Grade Code 2 Log Requirements to Make the Grade:

- Measure the end and count the number of end or surface checks over 4 cm in depth.
- Determine if there is more or less than 50% bark covering the bole.
- Determine whether the number of checks available for grade reduction meet the requirements of Section 9.5.4.2 and determine the length of the check.
- **If YES**, the section is 100% grade reduction.
- **If NO**, the section **can not** be 100% grade reduction for surface checks alone. Each check is boxed with trim allowance and the grade reduction is calculated using the appropriate method. This is also the method for determining grade reduction for checks on ends greater than 10 rads.

If there are insufficient numbers of checks to downgrade using the Grade Code 2 Log Requirements, then all checks 4 cm or greater must be assessed by adding trim allowance to the grade reduction and using an appropriate deduction method.

For logs with blue stain or beetle galleries, if the surface check is visible at the log end, but not visible on the surface of the log, the convention is to run the check half the length of the log, or 2.5 m (metres), whichever is less. This convention must only be used if the length of the check cannot be determined due to ice, snow, or mud. This convention is not to be used if the bole is bark covered, or if the actual length of the check can be determined.

9.2.4 Delay in Scaling

A delay in scaling is determined as follows:

- logs have been decked for a period of time such that the ends of the logs are dark and weathered,
- a field scale was previously conducted on the timber, or
- a determination has been made by the District Manager that a delay has occurred.

> In circumstances where surface and end checks are due to delays in scaling the Forest Service will order these checks to be disregarded.

9.3 Potential for Manufacture of Product - Quantity

Sawlog grades specify percentages of the gross scale that must be suitable to cut out lumber.

In order to ensure standard application of grade reduction procedures some additional information on assessment of defect on interior timber is provided

9.3.1 Log Size

In applying the diameter criteria, note the following:

- Diameter for purposes of applying interior grade rules is the gross diameter inside bark at the small end of the log for logs up to and including 8.0 m in length and the mid-point diameter for logs longer than 8.0 m. The gross diameter is the actual measured diameter before making any deduction for any defect, including sap rot, for all species.

9.3.2 Insect or Worm Holes

A number of insects lay eggs under the bark of trees and the larvae will bore through the wood as they develop. When the presence of borings is observed the quality of potential products may be reduced and the log grade affected.

Grade code 1 does not permit 5 or more insect holes to penetrate beyond the sapwood and/or heartwood of the tree per running metre, except for those of the ambrosia beetle which are disregarded altogether.

The Ambrosia beetle attacks felled timber and the small holes made by this insect are common. This is not a serious defect for sawlog grades which require merchantable quality lumber.

9.4 Potential for Manufacture of Products - Quality

As well as prescribing a percentage of the gross scale that must be suitable to produce manufactured products, each grade rule above Grade code 4 includes a specification regarding the quality of the potential product. Specifically, percentages of the lumber are required to be "merchantable".

Each grade rule has guidelines appended which state requirements regarding quality factors.

9.4.1 Occasional Oversized Knots

All sawlog grades can have occasional oversized knots. Knots which exceed the maximum for the log diameter are considered as oversized. Interior grading allows one oversized knot for every 2.5 m of log length. An exception to this rule is for Grade code 2 where the section of a log between 5 rads (10 cm) to 7 rads (15 cm) in diameter does not allow any oversized knots.

The location and frequency of oversized knots is a key determinant in assessing the merchantability of potential lumber recovery.

9.4.2 Knot Spacing

Knot spacing is only a consideration for Grade 1 logs. Knots $\geq$ 3 cm must be spaced at least 30 cm apart when measured lengthwise, and they must be 10 cm apart when considering knots measured side-to-side. As well, a single knot spacing consideration is permitted for every 2.5 m much the same as oversized knots. Adventitious knots are not considered for knot spacing.

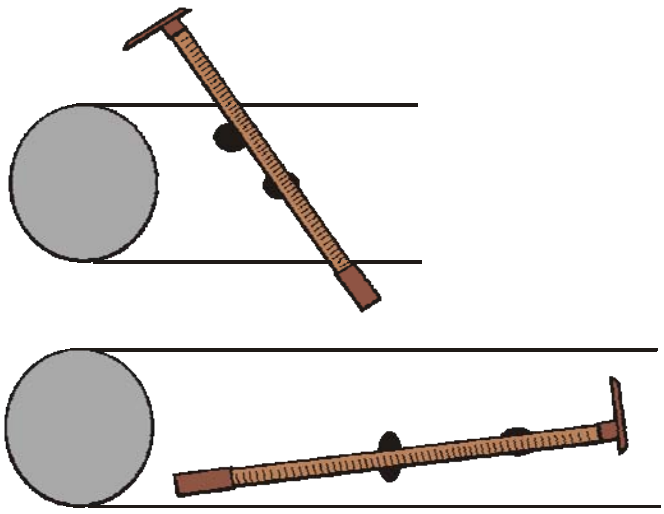

Figure 9.2 Knot Spacing Measurement.

9.4.3 Twist (Spiral Grain)

Measure twist over a 15 rads (30 cm) log section. To manufacture merchantable lumber the grain deflection over the 15 rad (30 cm) section cannot exceed 7 percent for grade code 1 and 15 percent for grade code 2, of the reference diameter. See the Timber Grading chapter for a more detailed explanation on measuring grain deflection.

9.4.4 Non-Permissible Defects

There are a number of defects which are not permitted to be present in certain grades of logs. Where such a defect is present the log is disqualified from the grade. An example of defect which is not permitted in certain grades is checks deeper than 4 cm in a Grade 1 code log.

Some grades permit certain defects only to a clearly defined limited extent. An example of this is the number of insect holes allowed in Interior Grade code 1 logs. When the defect is not confined to the stated limit it is treated as a non-permissible defect for that grade.

9.5 Interior Grade Rules and Application

The following sections state each of the five interior grade rules as they appear in the Scaling Regulation. The sections entitled "Application of the Grade Rule" which follows each grade rule includes information on how to apply the grade rule and enter the grade on the scale tally sheet or into a scaling computer.

9.5.1 Firmwood Reject - Grade Code Z (weight scale, species code or species code R)

The Firmwood Reject grade rule is identical for all species. When scaled in a weight scale sample, the grade code Z logs can be identified by species or by the letter R. For piece scale loads, the species code is always used.

9.5.1.1 Grade Rule

1. A log where:

    a. heart rot or hole runs the entire length of the log and the residual collar of the firmwood constitutes less than 50 percent of the gross scale of the log,

    b. rot is in the log and the scaler estimates the net length of the log to be less than 1.2 m, or

    c. sap rot or charred wood exists and the residual firmwood is less than 10 cm in diameter at the butt end of the log.

2. That portion of a log that is less than 10 cm in diameter or that portion of a slab that is less than 10 cm in thickness.

9.5.1.2 Application of the Grade Rule

1. Portions of logs and slabs less than 10 cm (5 rads) must be recorded as separate logs and graded as firmwood reject.

2. The correct species is always entered against all grades for piece scale and can be entered for weight scale. For weight scaling the letter R can also be used for samples.

9.5.2 Undersized Log Grade- Grade Code 6

9.5.2.1 Grade Rule

A log higher in grade than firmwood reject and cut from a tree that was below the minimum diameter, including the bark, at stump height.

9.5.2.2 Log Requirements to Make the Grade

The criteria outlined under Section 9.2.2 of this manual must be closely followed.

To conclude that a log was cut from an undersized tree:

- the logs must show sufficient evidence that they are cut from undersized trees such as an undercut, butt flare, feller-buncher cut, or other butt characteristics to indicate that it comprises a tree and not a top cut or second cut log from a larger tree,
- if the log is trimmed or long butted and the undercut is removed, it can no longer be graded as undersized
- the outside bark measurement must be taken at a point 15 cm from the butt face, and
- it must be less than the minimum diameter of 15 cm for Lodgepole Pine and 20 cm for all other species.

9.5.3 Premium Sawlog- Grade Code 1

9.5.3.1 Grade Rule

A log 2.5 m or more in length and 10 cm or more in radius, or a slab 2.5 m or more in length and 20 cm or more in width and 20 cm or more in thickness measured at right angle to the growth rings, where:

1. For a hemlock, cedar or balsam log or slab, at least 90 percent of the gross scale can be manufactured into lumber,
2. For all other species, at least 75 percent of the gross scale can be manufactured into lumber, and

3. For all species at least 75 percent of the lumber will be merchantable.

9.5.3.2 Log Requirements to Make the Grade

1. Internal rot/hole defect is not allowed in cedar slabs.
2. Sap rot or burnt/charred wood (excluding bark), where the total is at least 25% of the circumference of the log and at least 10% of the log length is affected by the defect is not allowed.
3. Section of the log where five or more insect holes per running metre, penetrating the sapwood and/or heartwood of the tree is not allowed.
4. Ambrosia beetle holes and surface beetle galleries are allowed.
5. Outside surface checking 4 cm or more in depth is not allowed.

6. Section of the log with catface with minimum dimensions of 2 cm in depth, by 2 cm in width, by 2 cm in length is added to the grade reduction.

7. Heart pith displacement of more than 20% from the geometrical centre of the log is a grade consideration. The affected shape of the compression wood defect for up to a 2.0 m length section is added to the grade consideration.

8. Section of the log that exceeds, the maximum twist permitted over 30 cm of length is 7 percent of the diameter from a minimum deviation of 2 cm up to a maximum deviation of 6 cm is added to the grade consideration.

9. By log radii, maximum knot size diameters that should not prevent the manufacture of the merchantable lumber requirements of the grade are:

Log Radius	Knot size diameter
5-7 cm	2 cm
8-13 cm	3 cm
14-18 cm	4 cm
19-24 cm	5 cm
25-37 cm	6 cm
38 + cm	7 cm

10. Section of the log where there is less than 30 cm spacing measured lengthwise and section of log where there is less than 10 cm spacing physically measured from side to side between knot centres are grade considerations. One spacing of less than 30 cm for length or 10 cm for side to side is allowed per 2.5 m of running length. This applies to all knots 3 cm or larger. The section of log affected by knot spacing is added to the grade consideration. Adventitious knots are not considered for knot spacing.

11. Other defects as per the scaling manual are allowed providing that the portion of the log free from these defects is sufficient to meet the grade rule.

9.5.4 Sawlog - Grade Code 2

9.5.4.1 Grade Rule

A log 2.5 m or more in length and 5 cm or more in radius, or a slab 2.5 m or more in length and 15 cm or more in width and 15 cm or more in thickness measured at right angle to the growth rings, where:

1. For a hemlock or cedar log or slab, at least 75 percent of the gross scale can be manufactured into lumber.

2. For a balsam log, at least 67 percent of the gross scale can be manufactured into lumber.

3. For all other species at least 50 percent of the gross scale can be manufactured into lumber.

4. For all species, at least 50 percent of the lumber will be merchantable.

9.5.4.2 Log Requirements to Make the Grade

1. For logs with **less than 50 % bark** covering (visual estimate $\pm$ 10 %) and also displaying blue stain or beetle galleries, the following applies:

   - Section of the log, 5 cm to 7 cm in radius, where there is **1 or more surface check** (4 cm or more in depth) is added to the grade reduction.

   - Section of log 8 cm in radius, where there are **2 or more surface checks** (4 cm or more in depth), or **1 spiral check** (4 cm or more in depth) affecting more that one quadrant of the log, is added to the grade reduction.

   - Section of log 9 cm in radius where there are **3 or more surface checks** (4 cm or more in depth), or **1 spiral check** (4 cm or more in depth) affecting more than one quadrant, is added to the grade reduction.

   - Logs equal to or greater than 10 cm of radius, **subtract 2 cm of radius** from the diameter as a grade reduction. Logs $\geq$ 10 cm of radius cannot be downgraded for surface checks alone. They must display other defects as per Chapter 8 of the *Scaling Manua*l.

2. For logs with **more than 50 %** bark covering (visual estimate ± 10 %) and also displaying blue stain or beetle galleries, the following applies:

   - Section of logs, 5 cm to 7 cm in radius, where there is **1 or more surface check** (4 cm or more in depth) is added to the grade reduction.

   - Section of logs 8 cm or more in radius, where there are **3 or more surface checks** (4 cm or more in depth) or **2 spiral checks** (4 cm or more in depth) affecting more than two quadrants, is added to the grade reduction.

   - Section of logs 9 cm in radius with **4 or more surface checks** (4 cm or more in depth) or **2 spiral checks** (4 cm or more in depth) and affecting more than two quadrants, is added to the grade reduction.

   - Logs equal to or greater than 10 cm of radius cannot be downgraded for surface checks alone. They must display other defects as per Chapter 8 of the *Scaling Manual*.

3. Section of a log that exceeds, the maximum twist permitted over 30 cm of length is 15 percent of the diameter, from a minimum deviation of 4 cm up to a maximum deviation of 9 cm, is added to the grade consideration.

4. By log radii, maximum knot size diameters that should not prevent the merchantable manufacture of the lumber requirements of the grade are:

Log Radius	Knot size diameter
5-7 cm	4 cm
8-13 cm	6 cm
14-18 cm	8 cm
19-24 cm	10 cm
25-37 cm	12 cm
38 + cm	14 cm

5. The section of log between 5 rads (10 cm) to 7 rads (15 cm) does not allow any oversized knots.

6. Other defects as per the scaling manual are allowed providing that the portion of the log free from these defects is sufficient to meet the grade rule.

9.5.5 Lumber Reject Grade Code 4

9.5.5.1 Grade Rule

A log or slab lower in grade then sawlog and higher in grade than firmwood reject.

9.5.5.2 Log Requirements to Make the Grade

1. Logs and slabs which do not meet the requirements of the sawlog code 2 grade fall into this grade unless:

    - they meet the firmwood reject definition, or
    - they are cut from trees that are undersized.

Coast Grading 10

10.1 Interpreting the Schedule of Coast Timber Grades

The Schedule of Coast Timber Grades is part of the *Scaling Regulation*. It is comprised of three parts.

Part 1	applies to all species and describes the Firmwood Reject Grade (Grade Code Z).
Part 2	describes the grades (other than Z) applicable to all commercial coniferous species except Yew (Taxus brevifolia).
Part 3	describes the grades (other than Z) applicable to all commercial broadleaf (deciduous or "hardwood") species, and Yew.

10.1.1 Grade Applicability

Timber must be classified by grade in accordance with the Schedule of Coast Timber Grades if timber is cut in a forest region (usually the Coast) or part of a forest region where the policies and procedures approved by the minister under the Act specify that log selling prices must be used to determine the rates of stumpage applicable to the timber.

> It is the area of harvest and not the place of scaling which determines the schedule of timber grades that must be used.

10.1.2 Grade Precedence

As per the *Scaling Regulation* scalers are instructed to record a log against the first grade in order of presentation in the scaling regulation. That same order is followed in this section.

10.2 Physical Characteristics Affecting Log Grades

Some aspects of the above factors have been explained earlier in this manual, while others require further explanation specific to coastal grading.

10.2.1 Potential for Manufacture of Products - Quantity

The proportions of a log's gross scale which are suitable, and not suitable, for the manufacture of products are important factors in determining its commercial value.

All the grades higher than No. 7 Chipper (Y) specify percentages of the gross scale which must be suitable to cut out lumber, veneer for fir peelers or shingles and shakes for shingle cedar.

Log defects which reduce recovery of the above products are identified in Section 8.3, and procedures for calculating the amount of loss they cause (grade reduction) are outlined in Section 8.4 of the *Timber Grading* chapter of this manual..

In order to ensure standard application of grade reduction procedures, some additional information on assessment of defect in coastal timber is provided here.

10.2.2 Log Size

For logs greater than 12.8 metres in length, the diameter for purposes of applying coast grade rules is the diameter measure inside bark at a point 12.8 metres above the large end, or butt, of the log.

10.2.2.1 Length

Length measurements specified in the grade rules are the actual unrounded gross measurements.

Where a log meets the minimum gross length for a grade but requires a deduction which reduces the net recorded length below the minimum, it is graded based on its gross length.

Length is a factor in log value, both in terms of efficiency in handling and lumber value potential.

10.3 Potential for Manufacture of Products - Quality

As well as prescribing a percentage of the gross scale which must be suitable to produce manufactured products, each grade rule above Y includes a specification regarding the quality of the potential product. Specifically, percentages of the lumber or shingles are required to be "clear" or "merchantable".

Each grade rule has guidelines appended which state requirements regarding quality factors. Some additional considerations specific to coastal grades are described below.

10.3.1 Size of Knots

Knots are measured at right angles to the log length except in peeler grades where the maximum diameter is used. The size of the knot does not include the shoulder.

Where the Grade Rule requirements stating maximum knot sizes and/or location are met, the merchantable or clear lumber percentage requirement for the grade will be satisfied.

10.3.2 Occasional Oversized Knots

All sawlog grades can have occasional larger knots. Occasional larger knots are allowed to the extent of one per 3 m of log length and must be located where knot sizes for portions of logs are specified.

Interpretation:

If a grade requirement allows 4 cm knots over the entire log, occasional larger knots can be anywhere on the log. Where the requirement states 4 rads knots are allowed on the upper half of a log, the occasional larger knots must be confined to this area as well, with knots no larger than 1 rad permitted on the lower half of the log.

10.3.3 Pitch

Pitch may accumulate in pockets between the rings or within a ring shake. The presence of pitch will lower the value of clear lumber and veneer.

The requirements for the peeler grades and the premium and lumber grades for subject species include limits on the number and size of pitch pockets allowed. For butt cut logs, pitch pockets are assessed in the top end only.

10.3.4 Growth Rate (Ring Count)

In addition to the quantity and the quality of the product out turn, some Coastal grade rules require a log to be fine grained. The fineness of grain relates to the separation between seasonal growth rings. Fine grained logs have a higher fibre density (proportionately more cellulose and lignin per unit volume) and will, therefore, produce stronger lumber and higher quality veneer.

The ring count of a log can greatly affect its value. The reason for this is that the narrower the separation between the rings, the denser the woody tissue. Denser woody tissue has more cellulose and lignin and is, therefore, stronger. In addition to this strength factor fine grained logs are easier to peel into veneer on a rotary lathe and yield higher quality and stronger veneer.

The annual rings may all be of equal thickness and centred perfectly around the central pith of the log, or they may be of varying thickness as a result of variations in growth rates (usually attributable to factors such as variations in nutrient availability, temperature, rainfall, and sunlight). They also may be offset from the geometric centre of the log.

When growth is not equally distributed and the heart is offset, the log will not peel well on a rotary lathe and can not yield high quality veneer no matter how fine grained.

Growth rings are counted at a point 1/3 of the radius in from the logs outer circumference at the small end of the log. The rings are then to be counted in the one rad (2 cm) area from this point towards the outer circumference of the log. Where a log has an off-centre heart, the rings are to be counted where their separation is widest. For a centred heart, count the rings where representative of the ring density for the entire end.

10.3.5 Stain

As described in the *Species Identification and Defects* chapter, the oxidation of phenolic compounds in tree tissues invaded and damaged or killed by micro-organisms (predominantly fungi) results in a pronounced discoloration of the woody tissue. This discoloration is commonly referred to as stain.

Some stains result soon after harvesting with the oxidation of newly exposed heartwood. Such stains are superficial and do not penetrate far into the log.

Also, the sawdust compacted between the cuts of logs bucked in the bush, but not separated, is often subject to staining fungus. These stains are also superficial and do not penetrate the log.

Stain does not cause any significant weakening of the wood fibre but it can detract from the appearance of the manufactured end products. Where these end products are for decorative or finishing purposes their value is lessened. For this reason the presence of stain is a grading consideration in some very valuable "clear lumber" coastal grades Scalers must also be aware that some types of stain can be faded when logs are left exposed to the ultraviolet component of sunlight. Usually when this has happened the affected wood will still appear subtly different than the surrounding unaffected tissues.

10.4 Coast Grade Rules and Requirements

10.4.1 Firmwood Reject - All Species - Grade Code Z (species code or code R)

Firmwood rejects are not considered for cut control purposes or charged stumpage, and some firmwood reject volumes are utilized in manufacturing processes.

The firmwood reject grade rule is identical for all species. When scaled in a weight scale sample Z logs can be identified by species code or the letter R in place of the species code. For piece scale loads the species code is used.

10.4.1.1 Grade Rule

1. A log where:

    a. heart rot or hole runs the entire length of the log and the residual collar of the firmwood constitutes less than 50 percent of the gross scale of the log,

    b. rot is in the log and the scaler estimates the net length of the log to be less than 1.2 m, or

    c. sap rot or charred wood exists and the residual firmwood is less than 10 cm in diameter at the butt end of the log.

2. That portion of a log that is less than 10 cm in diameter or that portion of a slab that is less than 10 cm in thickness.

> Note that this is the only grade rule that specifies diameter in cm rather than radius in cm (which equals diameter in rads).

10.4.2 Coniferous Grades

The following sections present the grade rules for each species, as they appear in the Scaling Regulation. Following each grade rule is a section outlining the detailed requirements a log must meet to make the grade

Each grade rule except Y states dimensions, a minimum percentage of product recovery potential, and a product quality requirement. The following Log Requirements to Make the Grade deal primarily with the product quality requirement. Where a log meets the Log Requirements to Make the Grade it will meet the product quality requirement of the grade rule.

10.4.3 Balsam and Hemlock Grades

These two genera are graded the same and the grades apply to all four species of balsam and both species of hemlock found in the province.

10.4.3.1 No 1 Lumber Balsam and Hemlock, Grade Code D

10.4.3.1.1 Grade Rule

A log 5 m or more in length and 33 cm or more in radius where at least 75 percent of the gross scale can be manufactured into merchantable lumber and at least 50 percent of that lumber will be clear.

10.4.3.1.2 Log Requirements to Make the Grade

1. No conk, or conk stain is permitted.

2. There must be no fewer than six annual rings in each 2 cm of diameter.

3. Logs 33 to 37 cm in radius must have at least 90 percent of the visible surface clear with only a few well spaced knots or knot indications permitted on the upper 10 percent of two sides or the upper 20 percent of one side.

4. Logs 38 cm or over in radius must have at least 80 percent of the visible surface clear with only a few well spaced knots or knot indications permitted on the upper 20 percent of both sides or the upper 40 percent of one side.

5. Maximum twist permitted over 30 cm of length is 4 percent of the diameter up to a maximum deviation of 6 cm.

6. Pocket rot is allowed. In balsam the pocket rot must be confined to the centre of the log within a circle 1/3 of the log radius, measured from the pith.

7. Ambrosia, burls, butt rot, butt shake, checks, crook, goitre, heart rot, pocket rot, sap rot, shatter, splits, sweep, or other defects are permitted providing the portion of the log free from these defects is sufficient to meet the grade rule.

10.4.3.2 No. 2 Lumber Balsam and Hemlock, Grade Code F

10.4.3.2.1 Grade Rule

A log 5 m or more in length and 25 cm or more in radius where at least 75 percent of the gross scale can be manufactured into merchantable lumber and at least 25 percent of that lumber will be clear.

10.4.3.2.2 Log Requirements to Make the Grade

1. No conk, or conk stain is permitted.

2. There must be no fewer than 6 annual rings in each 2 cm of diameter.

3. Logs 25 to 32 cm in radius must have at least 75 percent of the visible surface clear, with knots or knot indications permitted on the upper 25 percent of two sides or the upper 50 percent of one side.

4. Logs 33 cm or over in radius must have at least 50 percent of the visible surface clear, with knots or knot indications permitted on the upper 50 percent of two sides or the upper 75 percent of one side.

5. Maximum twist permitted over 30 cm of length is 4 percent of the diameter up to a maximum deviation of 6 cm.

6. Pocket rot is allowed. In balsam the pocket rot must be confined to the centre of the log within a circle 1/3 of the log radius measured from the pith.

7. Ambrosia, burls, butt rot, butt shake, checks, crook, goitre, heart rot, pocket rot, sap rot, shatter, splits, sweep, or other defects are permitted providing the portion of the log free from these defects is sufficient to meet the grade rule.

10.4.3.3 No. 2 Sawlog Balsam and Hemlock, Grade Code H

10.4.3.3.1 Grade Rule

A log 5 m or more in length, and:

- 19 cm or more in radius where at least 75 percent of the gross scale can be manufactured into lumber and at least 65 percent of that lumber will be merchantable.

- otherwise Grade Code D or F, 25 cm or more in radius, where at least 50 percent of the gross scale can be manufactured into merchantable lumber and at least 25 percent of that lumber will be clear.

10.4.3.3.2 Log Requirements to Make the Grade

1. There must be no fewer than five annual rings in each 2 cm of diameter.

2. On logs 19 to 24 cm in radius there must be no more than well-spaced knots up to 5 cm in diameter on the upper 50 percent of the visible surface, or reasonably well-spaced knots up to 4 cm in diameter over all the visible surface.

3. On logs 25 cm or over in radius there must be no more than occasional knots up to 8 cm in diameter on the upper 50 percent of the visible surface, or reasonably well-spaced knots up to 5 cm in diameter on the upper 66 2/3 percent of the visible surface or reasonably well-spaced knots up to 4 cm in diameter over all the visible surface.

4. Maximum twist permitted over 30 cm in length is 7 percent of the diameter up to a maximum deviation of 8 cm.

5. Butt rot, butt shake, checks, conk, conk stain, crook, goitre, heart rot, loose knots, oversized knots, pocket rot, rotten knots, sap rot, shatter, splits, sweep, or other defects are permitted providing the portion of the log free from these defects is sufficient to meet the grade rule.

10.4.3.4 No. 3 Sawlog Balsam and Hemlock, Grade Code I

10.4.3.4.1 Grade Rule

A log:

- 3.8 m or more in length and 19 cm or more in radius where at least 75 percent of the gross scale can be manufactured into lumber, and at least 50 percent of that lumber will be merchantable, or
- otherwise Grade Code H, 5 m or more in length and 19 cm or more in radius, where less than 75 percent but at least 50 percent of the gross scale can be manufactured into lumber and at least 65 percent of that lumber will be merchantable.

10.4.3.4.2 Log Requirements to Make the Grade

1. By log radii, maximum knot size diameters that should not prevent the manufacture of the lumber requirements of the grade are:

Log radius	Knot size diameter
19 - 24 cm	8 cm
25 - 37 cm	9 cm
38 + cm	10 cm

2. Maximum twist permitted over 30 cm of length is 10 percent of the diameter up to a maximum deviation of 9 cm.

3. Butt rot, butt shake, checks, conk, conk stain, crook, goitre, heart rot, loose knots, oversize knots, pocket rot, rotten knots, sap rot, shatter, splits, sweep, or other defects are permitted providing the portion of the log free from these defects is sufficient to meet the grade rule.

   Grade codes J, U, X and Y rules and requirements are defined at the end of this section.

10.4.4 Cedar Grades

These grades apply only to red cedar.

10.4.4.1 Lumber Grades

The lumber grades identify logs with significant percentages of clear cutting as described in the grade rules.

Knot specifications for lumber quality slabs will be those appropriate to the original round log.

10.4.4.2 No. 1 Lumber Cedar, Grade Code D

10.4.4.2.1 Grade Rule

1. A log 5 m or more in length and 30 cm or more in radius, or a slab 5 m or more in length, 25 cm or more in radius and 38 cm or more in thickness, where at least 75 percent of the gross scale can be manufactured into merchantable lumber and at least 50 percent of that lumber will be clear.

2. A log 5 m or more in length and 60 cm or more in radius where at least 66 2/3 percent of the gross scale can be manufactured into merchantable lumber and at least 50 percent of that lumber will be clear.

10.4.4.2.2 Log Requirements to Make the Grade

1. No powder worm damage is permitted.

2. Logs 30 to 37 cm in radius must have at least 75 percent of the visible surface clear with knots or knot indications permitted in the upper 25 percent of two sides or the upper 50 percent of one side.

3. Logs 38 cm or over in radius must have at least 66 2/3 percent of the visible surface clear with knots or knot indications permitted on the upper 33 1/3 percent of two sides or the upper 66 2/3 percent of one side.

4. Maximum twist permitted over 30 cm of length is 4 percent of the diameter up to a maximum deviation of 6 cm.

5. Adventitious knots, bark seams, burls, butt rot, catface, checks, crook, heart rot, pocket rot, oversized knots, sap rot, shatter, splits, sweep, or other defects are permitted providing the portion of the log free from these defects is sufficient to meet the grade rule.

10.4.4.3 No. 2 Lumber Cedar, Grade Code F

10.4.4.3.1 Grade Rule

A log 5 m or more in length and 25 cm or more in radius, or a slab 5 m or more in length, 25 cm or more in radius and 38 cm or more in thickness, where at least 75 percent of the gross scale can be manufactured into merchantable lumber and at least 25 percent of that lumber will be clear.

10.4.4.3.2 Log Requirements to Make the Grade

1. No powder worm damage is permitted.

2. Logs 25 to 29 cm in radius must have the visible surface clear of knots and knot indications.

3. Logs 30 to 37 cm in radius must have at least 66 2/3 percent of the visible surface clear with knots or knot indications permitted on the upper 33 1/3 percent of two sides or the upper 66 2/3 percent of one side.

4. Logs 38 cm or over in radius must have at least 50 percent of the visible surface clear with knots or knot indications permitted on the upper 50 percent of two sides or the upper 75 percent of one side.

5. Maximum twist permitted over 30 cm of length is 4 percent of the diameter up to a maximum deviation of 6 cm.

6. Adventitious knots, bark seams, burls, butt rot, catface, checks, crook, heart rot, oversized knots, pocket rot, sap rot, shatter, splits, sweep, or other defects are permitted providing the portion of the log free from these defects is sufficient to meet the grade rule.

10.4.4.4 Sawlog Grades

The sawlog grades describe logs suitable for the manufacture of lumber (i.e., basically round, sound logs that will permit efficient handling by a sawmill). These grades will permit frequent small to medium size knots. Slabs qualifying for these grades must be 38 cm thick and a shape regular enough to cut efficiently on a sawmill carriage.

10.4.4.5 No. 2 Sawlog Cedar, Grade Code H

10.4.4.5.1 Grade Rule

A log 5 m or more in length and 19 cm or more in radius where at least 75 percent of the gross scale can be manufactured into lumber and at least 65 percent of that lumber will be merchantable.

10.4.4.5.2 Log Requirements to Make the Grade

1. No powder worm damage is permitted.

2. On logs 19 to 24 cm in radius there must be no more than well-spaced knots up to 5 cm in diameter on the upper 50 percent of the visible surface or reasonably well-spaced knots up to 4 cm in diameter over all the visible surface.

3. On logs 25 cm or over in radius there must be no more than occasional knots up to 8 cm in diameter on the upper 50 percent of the visible surface, or well-spaced knots up to 5 cm in diameter on the upper 66 2/3 percent of the visible surface or reasonably well-spaced knots up to 4 cm in diameter over all the visible surface.

4. Maximum twist permitted over 30 cm of length is 7 percent of the diameter up to a maximum deviation of 8 cm.

5. Bark seams, burls, butt rot, catface, checks, heart rot, oversized knots, pocket rot, sap rot, shatter, splits, or other defects are permitted providing the portion of the log free from these defects is sufficient to meet the grade rule.

10.4.4.6 No. 3 Sawlog Cedar, Grade Code I

10.4.4.6.1 Grade Rule

A log:

- 3.8 m or more in length and 19 cm or more in radius where at least 75 percent of the gross scale can be manufactured into lumber and at least 50 percent of that lumber will be merchantable.
- 9.8 m or more in length and 25 cm or more in radius where at least 50 percent of the gross scale can be manufactured into lumber and at least 50 percent of that lumber will be merchantable.
- otherwise grade code H, 9.8 m or more in length and 19 cm or more in radius where at least 50 percent of the gross scale can be manufactured into lumber and at least 65 percent of that lumber will be merchantable.

10.4.4.6.2 Log Requirements to Make the Grade

1. By log radii, maximum knot size diameters which should not prevent the manufacture of the lumber requirements of the grade are:

Log radius	Knot size diameter
19 - 24 cm	8 cm
25 - 37 cm	9 cm
38 + cm	10 cm

2. Maximum twist permitted over 30 cm in length is 10 percent of the diameter up to a maximum deviation of 9 cm.

3. Butt rot, catface, checks, crook, bark seams, heart rot, insect holes, loose knots, oversized knots, pocket rot, powder worm, rotten knots, sap rot, shatter, splits, sweep, or other defects are permitted providing the portion of the log free from these defects is sufficient to meet the grade rule.

10.4.4.7 No. 4 Sawlog Cedar, Grade Code J

Grade Code J rules and requirements are defined at the end of this section.

10.4.4.8 Shingle Grades

Shingle grade logs will have fewer but possibly larger knots than sawlogs, so spaced to permit the production of shingle blocks. Shingle logs are generally not best utilized for the manufacture of lumber because of the nature of the knots or because they are irregular in shape, have excessive butt or heart rot, bark seams, open checks, rotten knots, shatter, or combinations of the above defects.

1. The shingle grade rules make no reference to the recovery of lumber. Scalers will judge the recovery percentage required to produce shingles or shakes.

2. Some very defective cedar logs should go into shingle grades.

3. 'D' quality logs with less than 75 percent suitable for lumber become 'K' grade, except D's 60 rads or larger which become K's if they have less than 66 2/3 percent suitable for lumber.

4. 'F' quality logs with less than 75 percent lumber become 'L' grade, except that those from 25 to 29 rads which become K's if they have less than 75 percent suitable for lumber.

Other Shingle Considerations:

Other defective cedar logs may fit either into a sawlog or shingle grade. The following types of logs and slabs should be given serious consideration for the shingle grade.

1. Logs less than 7.8 m in length, broken at one end.

2. Logs less than 9.8 m in length, broken at both ends.

3. Those 'H' or 'I' quality logs at least 9.8 m in length containing 50 - 74 percent lumber, which are more suitable for quality shingle recovery and can meet grade 'L' requirements.

4. Logs less than 12.8 m in length and less than 75 percent lumber with a serious defect at both ends.

5. 'D' and 'F' quality logs cut too short for those grades.

10.4.4.9 No. 1 Shingle Cedar, Grade Code K

10.4.4.9.1 Grade Rule

A log 3.8 m or more in length and 25 cm or more in radius or a slab 3.8 m or more in length, 25 cm or more in radius and 38 cm or more in thickness, where at least 50 percent of the gross scale can be manufactured into shingles or shakes, and at least 75 percent of the shingles or shakes will be clear.

10.4.4.9.2 Log Requirements to Make the Grade

1. No powder worm damage is permitted.

2. Logs 25 to 29 cm in radius must have the visible surface clear of knots and knot indications.

3. Logs 30 to 37 cm in radius must have at least 75 percent of the visible surface clear with knots or knot indications permitted on the upper 25 percent of two sides or the upper 50 percent of one side.

4. Logs 38 cm or over in radius must have at least 66 2/3 percent of the visible surface clear with knots or knot indications permitted on the upper 33 1/3 percent of two sides or the upper 66 2/3 percent of one side.

5. Maximum twist permitted over 30 cm in length is 4 percent of the diameter up to a maximum deviation of 6 cm.

6. Bark seams, burls, butt rot, catface, checks, crook, heart rot, oversized knots, pocket rot, sap rot, shatter, splits, sweep, or other defects are permitted providing that the portion of the log free from these defects is sufficient to meet the grade rule.

10.4.4.10 No. 2 Shingle Cedar, Grade Code L

10.4.4.10.1 Grade Rule

A log 3.8 m or more in length and 19 cm or more in radius or a slab 3.8 m or more in length, 19 cm or more in radius and 26 cm or more in thickness where at least 50 percent of the gross scale can be manufactured into shingles or shakes and at least 50 percent of the shingles or shakes will be clear.

10.4.4.10.2 Log Requirements to Make the Grade

1. No powder worm damage is permitted.

2. Logs must have at least 50 percent of the visible surface clear, with knots and knot indications permitted on the upper 50 percent of two sides, or on all of one side.

3. Logs over 30 rads or slabs will permit large knots spaced so sufficient clear shingle blocks can be cut from the area between the knots to meet the grade rule. The large knots must have 30 rads (0.6 m) spacing to allow shingle blocks to be cut between them, and the blocks must be a quadrant.

4. Maximum twist permitted over 30 cm of length is 7 percent of the diameter up to a maximum deviation of 8 cm.

5. Bark seams, burls, butt rot, catface, checks, crook, heart rot, oversized knots, pocket rot, sap rot, shatter, splits, sweep, or other defects are permitted providing the portion of the log free from these defects is sufficient to meet the grade rule.

10.4.4.11 No. 3 Shingle Cedar, Grade Code M

10.4.4.11.1 Grade Rule

A log 3.8 m or more in length and 19 cm or more in radius or a slab 3.8 m or more in length, 13 cm or more in radius and 16 cm or more in thickness where at least 50 percent of the gross scale can be manufactured into shingles and at least 25 percent of the shingles will be clear.

10.4.4.11.2 Log Requirements to Make the Grade

The following are the log requirements to make this grade:

1. No powder worm is permitted.

2. Logs must have at least 25 percent of the visible surface clear, with knots and knot indications permitted on the upper 75 percent of two sides, or all of one side and the upper 50 percent of the other.

3. Logs over 25 rads or slabs will permit large knots spaced so sufficient clear shingle blocks can be cut from the area between the knots to meet the grade rule. The large knots must have 30 rads (0.6 m) spacing to allow shingle blocks to be cut between them, and the blocks must represent a quadrant.

4. Maximum twist permitted over 30 cm of length is 7 percent of the diameter up to a maximum deviation of 8 cm.

5. Bark seams, burls, butt rot, catface, checks, crook, heart rot, pocket rot, sap rot, shatter, splits, sweep, and other defects are permitted providing the portion of the log free from these defects is sufficient to meet the grade rule.

   Grade codes U, X and Y rules and requirements are defined at the end of this section.

10.4.5 Cypress Grades

These grades apply to cypress, also known as yellow-cedar.

10.4.5.1 No. 1 Lumber Cypress, Grade Code D

10.4.5.1.1 Grade Rule

A log 4 m or more in length and 30 cm or more in radius where at least 75 percent of the gross scale can be manufactured into merchantable lumber and at least 50 percent of that lumber will be clear.

10.4.5.1.2 Log Requirements to Make the Grade

1. Logs 30 to 37 cm in radius must have at least 75 percent of the visible surface clear with knots or knot indications permitted on the upper 25 percent of two sides or the upper 50 percent of one side.

2. Logs 38 cm or over in radius must have at least 66 2/3 percent of the visible surface clear with knots or knot indications permitted on the upper 33 1/3 percent of two sides or the upper 66 2/3 percent of one side.

3. Maximum twist permitted over 30 cm of length is 4 percent of the diameter up to a maximum deviation of 6 cm.

4. Adventitious knots, burls, butt rot, catface, checks, crook, frost checks, heart rot, oversized knots, pocket rot, ring rot, sap rot, shatter, splits, stain, sweep, or other defects are permitted providing the portion of the log free from these defects is sufficient to meet the grade rule.

10.4.5.2 No. 2 Lumber Cypress, Grade Code F

10.4.5.2.1 Grade Rule

A log:

- 4 m or more in length and 25 cm or more in radius where at least 75 percent of the gross scale can be manufactured into merchantable lumber and at least 25 percent of that lumber will be clear, or

- otherwise grade code D, 6.2 m or more in length and 30 cm or more in radius where less than 75 percent but at least 50 percent of the gross scale can be manufactured into merchantable lumber and at least 50 percent of that lumber will be clear.

10.4.5.2.2 Log Requirements to Make the Grade

1. Logs 25 to 29 cm in radius must have at least 75 percent of the visible surface clear with knots or knot indications permitted on the upper 25 percent of two sides or the upper 50 percent of one side.

2. Logs 30 cm or over in radius must have at least 50 percent of the visible surface clear with knots or knot indications permitted on the upper 50 percent of two sides or the upper 75 percent of one side.

3. Maximum twist permitted over 30 cm of length is 4 percent of the diameter up to a maximum deviation of 6 cm.

4. Adventitious knots, burls, butt rot, catface, checks, crook, frost checks, heart rot, oversized knots, pocket rot, ring rot, sap rot, shatter, splits, stain, sweep, or other

defects are permitted providing the portion of the log free from these defects is sufficient to meet the grade rule.

10.4.5.3 No. 2 Sawlog Cypress, Grade Code H

10.4.5.3.1 Grade Rule

A log 4 m or more in length and 19 cm or more in radius where at least 50 percent of the gross scale can be manufactured into lumber and at least 65 percent of that lumber will be merchantable.

10.4.5.3.2 Log Requirements to Make the Grade

1. On logs 19 to 24 cm in radius there must be no more than well-spaced knots up to 5 cm in diameter on the upper 50 percent of the visible surface, or reasonably well-spaced knots up to 4 cm in diameter over all the visible surface.

2. On logs 25 cm or over in radius there must be no more than occasional knots up to 8 cm in diameter on the upper 50 percent of the visible surface, or well-spaced knots up to 5 cm in diameter on the upper 66 2/3 percent of the visible surface or reasonably well-spaced knots up to 4 cm in diameter over all the visible surface.

3. Maximum twist permitted over 30 cm of length is 7 percent of the diameter up to a maximum deviation of 8 cm.

4. Butt rot, catface, checks, frost checks, heart rot, oversized knots, pocket rot, ring rot, sap rot, shatter, splits, or other defects are permitted providing the portion of the log free from these defects is sufficient to meet the grade rule.

10.4.5.4 No. 3 Sawlog Cypress, Grade Code I

10.4.5.4.1 Grade Rule

A log 4 m or more in length and 19 cm or more in radius where at least 50 percent of the gross scale can be manufactured into lumber and at least 50 percent of that lumber will be merchantable.

10.4.5.4.2 Log Requirements to Make the Grade

1. By log radii, maximum knot size diameters that should not prevent the manufacture of the lumber requirements of the grade are:

Log radius	Knot size diameter
19 - 24 cm	8 cm
25 - 37 cm	9 cm
38 + cm	10 cm

2. Maximum twist permitted over 30 cm in length is 10 percent of the diameter up to a maximum deviation of 9 cm.

3. Butt rot, catface, checks, crook, frost checks, heart rot, insect holes, loose knots, oversized knots, pocket rot, ring rot, rotten knots, sap rot, shatter, splits, sweep, or other defects are permitted providing the portion of the log free from these defects is sufficient to meet the grade rule.

   Grade codes J, U, X and Y rules and requirements are defined at the end of this section.

10.4.6 Fir and Pine Grades

With the exception that pine has no peeler grades, these two genera are graded the same. The grades apply to all species of pine found in the province.

10.4.6.1 No. 1 Lumber Fir and Pine, Grade Code D

10.4.6.1.1 Grade Rule

A log 5 m or more in length and 38 cm or more in radius where at least 75 percent of the gross scale can be manufactured into merchantable lumber and at least 50 percent of that lumber will be clear.

10.4.6.1.2 Log Requirements to Make the Grade

1. No conk or conk stain is permitted.

2. Pocket rot is allowable only if it is contained within a circle 1/3 the log radius, measured from the pith.

3. There must be no fewer than six annual rings in each 2 cm of diameter.

4. Logs must have at least 90 percent of the visible surface clear with only a few well-spaced knots or knot indications permitted on the upper 10 percent of two sides or the upper 20 percent of one side.

5. Maximum twist permitted over 30 cm in length is 4 percent of the diameter up to a maximum deviation of 6 cm.

6. Only small pitch pockets ranging in numbers per end from three for logs 38 cm in radius to six for logs 76 cm or over in radius are permitted.

7. No ring shakes (full or partial) are permitted in that part of the log between 8 cm and 20 cm of the bark.

8. A ring shake within 8 cm of the bark is only permitted if the log inside the shake is at least 38 rads, and the log meets the rest of the grade rule.

9. Insect or worm holes other than ambrosia must not penetrate beyond the sap wood.

10. Ambrosia, butt rot, burls, checks, crook, heart rot, ring shake, sap rot, shatter, splits, sweeps, or other defects are permitted providing the portion of the log free from these defects is sufficient to meet the grade rule.

10.4.6.2 No. 2 Lumber Fir and Pine, Grade Code F

10.4.6.2.1 Grade Rule

A log 5 m or more in length and 30 cm or more in radius where at least 75 percent of the gross scale can be manufactured into merchantable lumber and at least 25 percent of that lumber will be clear.

10.4.6.2.2 Log Requirements to Make the Grade

1. No conk or conk stain is permitted.

2. Pocket rot is allowed only if it is contained within a circle 1/3 of the log radius, measured from the pith.

3. There must be no fewer than six annual rings in each 2 cm of diameter.

4. Logs 30 to 37 cm of radius must have at least 75 percent of the visible surface clear with only a few well-spaced knots or knot indications permitted on the upper 25 percent of two sides or the upper 50 percent of one side.

5. Logs 38 cm and over in a radius must have at least 50 percent of the visible surface clear with only a few well-spaced knots or knot indications permitted on the upper 50 percent of two sides or upper 75 percent of one side.

6. Maximum twist permitted over 30 cm in length is 4 percent of the diameter at the top of the log to a maximum deviation of 6 cm.

7. 7. Only small pitch pockets ranging in number per end from two for logs 30 cm in radius up to six for logs 76 cm or over in radius are permitted.

8. A ring shake that encircles half or more of the circumference of the ring is not permitted in that portion of the log between 4 rads and 10 rads of the bark. A ring shake within 4 rads of the bark is only permitted if within that part of the log inside the shake is at least 30 rads and the log meets the rest of the grade rule.

9. Insect or worm holes other than ambrosia must not penetrate beyond the sap wood.

10. Ambrosia, butt rot, burls, checks, crook, heart rot, ring shake, sap rot, shatter, splits, sweeps, or other defects are permitted providing the portion of the log free from these defects is sufficient to meet the grade rule.

10.4.6.3 No. 2 Peeler Fir, Grade Code B

10.4.6.3.1 Grade Rule

A log 5.2 m or more in length and 30 cm or more in radius where at least 80 percent of the gross scale can be manufactured on a rotary lathe into veneer.

10.4.6.3.2 Log Requirements to Make the Grade

1. No heart rot, conk, conk stain, or pocket rot is permitted.

2. There must be no fewer than six annual rings in each 2 cm of diameter.

3. Logs 30 to 37 cm in radius must have the 2.6 m butt block free of knots or knot indications.

4. Logs 38 cm or over in radius must have the 2.6 m butt block free of knots, - indications permitted.

5. No knots over 4 cm are permitted and knots or knot indications 4 cm or less in diameter must be well-spaced. Bunch knots that can be encircled in a 4 cm diameter are permitted.

6. Maximum twist permitted over 30 cm of length is 7 percent of the diameter up to a maximum deviation of 8 cm.

7. Butt rot must not be present in logs less than 8 m in length.

8. The diameter of butt rot in logs 8 m to less than 10.4 m in length must not exceed 33 1/3 percent of the measured butt diameter after excluding flare.

9. The diameters of butt rot in logs 10.4 m or over in length must not exceed 50 percent of the measured butt diameter after excluding flare.

10. Butt star checks must not be longer than half the top diameter of the log.

11. No more than one heart check or split which must not affect the outer 25 percent of the radius is permitted at either end of log. A check appearing in both ends of the log must be considered to be the same check to be allowed.

12. Insect or worm holes other than ambrosia must not penetrate beyond the sap wood.

13. An angular heart check will be allowed if it does not vary more than 45 degrees from a straight line and does not affect the outer 25 percent of the radius.

14. Only small pitch pockets ranging in numbers per end from three for logs 30 cm in radius to seven for logs 76 cm or over in radius are permitted.

15. One partial ring shake which does not extend around half the circumference of the ring and does not have checks at right angles to the shake, or a full ring shake with a diameter not exceeding 33 1/3 percent of the diameter of the log is permitted. An allowable shake in the outer 66 2/3 percent of the diameter is permitted in one end only. An allowable shake in the inner 33 1/3 percent of the diameter is permitted in both ends.

16. Ring shake with a check is permitted if both can be contained in the centre of a log by a circle not exceeding 1/3 the diameter of the log.

17. Logs can exhibit sap rot or sun checks to a depth of 4 percent of the top diameter of the log. The maximum depth of a sap rot or sun checks shall not exceed 5 cm.

18. At the top end of a log, off centre heart is permitted only where distance from true centre does not exceed 10 percent of the top diameter of the log.

19. Sweep is permitted to the following extent:

    a. logs 5.2 m to less than 8 m in length allow up to a 0.6 m consideration for sweep, with no mental bucking to reduce loss for sweep permitted in peelers less than 8 m long,

    b. logs 8 m to less than 10.4 m in length allow up to a 1.2 m consideration for sweep, with one mental buck allowed for logs 8 m to less than 12.8 m long,

    c. logs 10.4 m and over in length allow up to a 2 m consideration for sweep, with two mental bucks allowed for logs over 12.8 m long.

20. Crook (a definite kink) and pistol grip (a sharp bend near the large end of a butt log) is permitted to the following extent:

    a. logs 5.2 m to less than 8 m in length, no loss is allowed,

    b. logs 8 m to less than 10.4 m in length, up to a 1.2 m consideration is allowed,

    c. logs 10.4 m and over in length, up to a 2 m consideration is allowed.

21. On logs 10.4 m and over in length bucking breaks, splits and broken ends are allowed provided the defect can be eliminated in a length equal to the top diameter.

22. Burls are permitted to the extent of one medium or large size burl for every 2.6 m of log length.

10.4.6.4 No. 3 Peeler Fir, Grade Code C

10.4.6.4.1 Grade Rule

A log 5.2 m or more in length and 19 cm or more in radius where at least 80 percent of the gross scale can be manufactured on a rotary lathe into veneer.

10.4.6.4.2 Log Requirements to Make the Grade

1. No heart rot, conk, conk stain, or pocket rot is permitted.

2. There must be no fewer than six annual rings in each 2 cm of diameter.

3. No knots over 4 cm in diameter are permitted and knots 4 cm or less in diameter must be well spaced. Bunch knots that can be encircled in a 4 cm diameter are permitted.

4. Maximum twist permitted over 30 cm of length is 7 percent of the diameter up to a maximum deviation of 8 cm.

5. Butt rot must not be present in logs less than 8 m in length.

6. The diameter of butt rot in logs 8 m to less than 10.4 m in length must not exceed 33 1/3 percent of the measured butt diameter after excluding flare.

7. The diameter of butt rots in logs 10.4 m or over in length must not exceed 50 percent of the measured butt diameter after excluding flare.

8. Butt star checks must not be longer than half the top diameter of the log.

9. No more than one heart check or split that must not affect the outer 25 percent of the radius is permitted at either end of the log.

10. Insect or worm holes other than ambrosia must not penetrate beyond the sap wood.

11. An angular heart check will be allowed if it does not vary more than 45 degrees from a straight line but must not affect the outer 25 percent of the radius.

12. Only small pitch pockets ranging in numbers per end from two for logs 19 cm in radius to seven for logs 76 cm or over in radius are permitted.

13. One partial ring shake that does not extend around half the circumference of the ring and does not have checks at right angles to the shake, or a full ring shake with a diameter not exceeding 33 1/3 percent of the diameter of the log is permitted. An allowable shake in the outer 66 2/3 percent of the diameter is permitted in one end only. An allowable shake in the inner 33 1/3 percent of the diameter is permitted in both ends.

14. Ring shake with a check is permitted if both can be contained in the centre of a log by a circle not exceeding one third the diameter of the log.

15. No sap rot or sun checks are allowed in logs less than 25 cm in radius. Logs 25 cm in radius and greater can exhibit sap rot or sun checks to a depth of 4 percent of the top diameter of the log. The maximum depth of sap rot or sun check shall not exceed 5 cm.

16. At the top end of a log, off centre heart is permitted only where distance from true centre does not exceed 10 percent of the top diameter of the log.

17. Sweep is permitted to the following extent:

    a. logs 5.2 m to less than 8 m in length allow up to a 0.6 m consideration for sweep, with no mental bucking to reduce the loss for sweep permitted in peelers less than 8 m long,

    b. logs 8 m to less than 10.4 m in length allow up to a 1.2 m consideration for sweep, with one mental buck allowed for logs 8 m to less than 12.8 m long, and

    c. logs 10.4 m and over in length allow up to a 2 m consideration for sweep, with two mental bucks allowed for logs over 12.8 m long.

18. Crook (a definite kink) and pistol grip (a sharp bend near the large end of a butt log) is permitted to the following extent:

    a. logs 5.2 m to less than 8 m in length, no loss is allowed,

    b. logs 8 m to less than 10.4 m in length, up to a 1.2 m consideration is allowed, and

    c. logs 10.4 m and over in length, up to a 2 m consideration is allowed.

19. On logs 10.4 m and over in length bucking breaks, splits, and broken ends are allowed provided the defect can be eliminated in a length equal to the top diameter.

20. Burls are permitted to the extent of one medium or large size burl for every 2.6 m of log length.

10.4.6.5 No. 2 Sawlog Fir and Pine, Grade Code H

10.4.6.5.1 Grade Rule

A log 5 m or more in length and

- 19 cm or more in radius where at least 75 percent of the gross scale can be manufactured into lumber.

- 25 cm or more in radius where at least 50 percent of the gross scale can be manufactured into lumber and at least 65 percent of that lumber will be merchantable.

10.4.6.5.2 Log Requirements to Make the Grade

1. There must be no fewer than five annual rings in each 2 cm of diameter.

2. On logs 19 to 24 cm in radius there must be no more than well-spaced knots up to 5 cm in diameter on the upper 50 percent of the visible surface, or reasonably well-spaced knots up to 4 cm in diameter over all the visible surface.

3. On logs 25 cm or over in radius there must be no more than occasional knots up to 8 cm in diameter on the upper 50 percent of the visible surface, or reasonably well-spaced knots up to 5 cm in diameter on the upper 66 2/3 percent of the visible surface or reasonably well spaced knots up to 4 cm in diameter over all the visible surface.

4. Maximum twist permitted over 30 cm in length is 7 percent of the diameter up to a maximum deviation of 8 cm.

5. Insect or worm holes other than ambrosia must not penetrate beyond the sap wood.

6. Butt rot, checks, conk, conk stain, crook, heart rot, oversized knots, pitch pockets, pocket rot, ring shake, sap rot, shatter, splits, sweep, or other defects are permitted providing the portion of log free from these defects is sufficient to meet the grade rule.

10.4.6.6 No. 3 Sawlog Fir and Pine, Grade Code I

10.4.6.6.1 Grade Rule

A log:

- 3.8 m or more in length and,
  - 19 cm or more in radius where at least 75 percent of the gross scale can be manufactured into lumber, or
  - 25 cm or more in radius where at least 50 percent of the gross scale can be manufactured into lumber,
  - and at least 50 percent of that lumber will be merchantable, or
- 0therwise grade code H, 5 m or more in length and 19 to 24 cm in radius, where less than 75 percent but at least 50 percent of the gross scale can be manufactured into lumber and at least 65 percent of that lumber will be merchantable.

10.4.6.6.2 Log Requirements to Make the Grade

1. By log radii, maximum knot size diameters that should not prevent the manufacture of the lumber requirements of the grade are:

Log radius	Knot size diameter
19 - 24 cm	8 cm
25 - 37 cm	9 cm
38 + cm	10 cm

2. Maximum twist permitted over 30 cm of length is 10 percent of the diameter up to a maximum deviation of 9 cm.

3. Bunch knots, butt rot, checks, conk, conk stain, crook, heart rot, insect holes, loose knots, oversized knots, pitch pockets, pocket rot, ring shake, rotten knots, sap rot, shatter, splits, sweep, or other defects are permitted providing the portion of the log free from these defects is sufficient to meet the grade rule.

   Grade codes J, U, X and Y rules and requirements are defined at the end of this section.

10.4.7 Spruce Grades

Wavy grain or "Horse Mane" is a grain defect peculiar to spruce. If present to more than a slight amount or in conjunction with spiral grain, the log must be degraded. For spruce 'D, E and F wavy grain is permitted only to a slight degree. Spruce 'G' wavy grain is permitted to a slightly greater extent in larger logs.

10.4.7.1 No. 1 Premium Spruce, Grade Code D

10.4.7.1.1 Grade Rule

A fine grained log 4 m or more in length and 50 cm or more in radius where at least 75 percent of the gross scale can be manufactured into merchantable lumber and at least 50 percent of that lumber will be clear.

10.4.7.1.2 Log Requirements to Make the Grade

1. No conk or conk stain is permitted.

2. Pocket rot is permitted if it is contained in a circle 1/3 the log radius, measured from the pith.

3. There must be no fewer than 12 annual rings in each 2 cm of diameter.

4. Logs 50 - 59 cm in radius must have at least 90 percent of the visible surface clear with only a few well-spaced knots or knot indications permitted on the upper 10 percent of two sides or the upper 20 percent of one side.

5. Logs 60 cm or more in radius must have at least 80 percent of the visible surface clear with only a few well-spaced knots or knot indications permitted on the upper 20 percent of two sides or the upper 40 percent of one side.

6. Maximum twist permitted over 30 cm of length is 4 percent of the diameter up to a maximum deviation of 6 cm.

7. Only small pitch pockets ranging from three for logs 50 cm in radius to six for logs 76 cm and over in radius are permitted.

8. Insect or worm holes other than ambrosia must not penetrate beyond the sapwood.

9. Ambrosia, burls, wavy grain (horse mane), butt rot, checks, crook, heart rot, sap rot, shatter, splits, sweep, bell butt, flared butt, or other defects are permitted providing the portion free from these defects is sufficient to meet the grade rule.

10.4.7.2 No. 2 Premium Spruce, Grade Code E

10.4.7.2.1 Grade Rule

A fine grained log:

1. 4 m or more in length and 38 cm or more in radius where at least 75 percent of the gross scale can be manufactured into merchantable lumber and at least 25 percent of that lumber will be clear or,

2. Otherwise grade code D, 6.2 m or more in length and 50 cm or more in radius, where less than 75 percent but at least 66 2/3 percent of the gross scale can be manufactured into merchantable lumber and at least 50 percent of that lumber will be clear.

10.4.7.2.2 Log Requirements to Make the Grade

1. No conk or conk stain rot is permitted.

2. Pocket rot is permitted if it is contained within a circle 1/3 the log radius, measured from the pith.

3. There must be no fewer than 12 annual rings in each 2 cm of diameter.

4. Logs 38 - 49 cm in radius must have at least 75 percent of the visible surface clear with only a few well-spaced knots or knot indications permitted on the upper 25 percent of two sides or the upper 50 percent of one side.

5. Logs 50 cm in radius and over will allow a few well-spaced knots or knot indications on the upper 50 percent of two sides or the upper 75 percent of one side.

6. Maximum twist permitted over 30 cm of length is 4 percent of the diameter up to a maximum deviation of 6 cm.

7. Only small pitch pockets ranging from two per end for logs 38 cm in radius to six for logs 76 cm and over are permitted.

8. Insect or worm holes other than ambrosia must not penetrate beyond the sapwood.

9. Ambrosia, burls, wavy grain (horse mane), butt rot, checks, crook, heart rot, sap rot, shatter, splits, sweep, bell, butt, flared butt, or other defects are permitted providing the portion free from these defects is sufficient to meet the grade rule.

10.4.7.3 No. 1 Lumber Spruce, Grade Code F

10.4.7.3.1 Grade Rule

A log 4 m or more in length and 38 cm or more in radius where at least 75 percent of the gross scale can be manufactured into merchantable lumber and at least 50 percent of that lumber will be clear.

10.4.7.3.2 Log Requirements to Make the Grade

1. No conk or conk stain is permitted.

2. Pocket rot is permitted if it is contained within a circle 1/3 the log radius, measured from the pith.

3. There must be no fewer than six annual rings in each 2 cm of diameter.

4. Logs must have at least 90 percent of the visible surface clear with only a few well-spaced knots or knot indications permitted on the upper 10 percent of two sides or the upper 20 percent of one side.

5. Maximum twist permitted over 30 cm of length is 4 percent of the diameter up to a maximum deviation of 6 cm.

6. Only small pitch pockets ranging from three per end for logs 38 cm in radius to six for logs 76 cm or over in radius are permitted.

7. Insect or worm holes other than ambrosia must not penetrate beyond the sap wood.

8. Ambrosia, burl, wavy grain (horse mane), butt rot, checks, crook, heart rot, sap rot, shatter, splits, sweep, or other defects are permitted providing the portion of the log free from these defects is sufficient to meet the grade rule.

10.4.7.4 No. 2 Lumber Spruce, Grade Code G

10.4.7.4.1 Grade Rule

A log 4 m or more in length and 30 cm or more in radius where at least 75 percent of the gross scale can be manufactured into merchantable lumber and at least 25 percent of that lumber will be clear.

10.4.7.4.2 Log Requirements to Make the Grade

1. No conk or conk stain is permitted.

2. Pocket rot is permitted if it is contained within a circle 1/3 the log radius, measured from the pith.

3. There must be no fewer than six annual rings in each 2 cm of diameter.

4. Logs 30 to 37 cm in radius must have at least 75 percent of the visible surface clear with only a few well-spaced knots or knot indications permitted on the upper 25 percent of two sides or the upper 50 percent of one side.

5. Logs 38 cm or more in radius:

    a. must have at least 50 percent of the visible surface clear with only a few well-spaced knots or knot indications permitted on the upper 50 percent of two sides or the upper 75 percent of one side, or

    b. will permit large knots spaced so clear lumber, 2.5 m in length, shop type, can be cut from the area between the knots on at least 75 percent of the log's surface.

6. Logs 50 cm and over in radius will permit large knots spaced so clear lumber, 2.5 m in length, shop type, can be cut from the area between the knots on at least 50 percent of the log's surface.

7. Maximum twist permitted over 30 cm of length is 4 percent of the diameter up to a maximum deviation of 6 cm.

8. Only small pitch pockets ranging from two per end for logs 30 cm in radius to six for logs 76 cm or over in radius are permitted.

9. Insect or worm holes other than ambrosia must not penetrate beyond the sap wood.

10. Ambrosia, burls, wavy grain (horse mane), butt rot, checks, crook, heart rot, sap rot, shatter, splits, sweep, or other defects are permitted providing the portion of the log free from these defects is sufficient to meet the grade rule.

10.4.7.5 No. 2 Sawlog Spruce, Grade Code H

10.4.7.5.1 Grade Rule

A log:

- 4 m or more in length and 19 cm or more in radius where at least 75 percent of the gross scale can be manufactured into lumber and at least 65 percent of that lumber will be merchantable or,

- otherwise grade code D, E, F or G, 4 m or more in length and 30 cm or more in radius, where less than 75 percent but at least 50 percent of the gross scale can be manufactured into merchantable lumber and at least 25 percent of the lumber will be clear.

10.4.7.5.2 Log Requirements to Make the Grade

1. There must be no fewer than five annual rings in each 2 cm of diameter.

2. On logs 19 to 24 cm in radius there must be no more than well-spaced knots up to 5 cm in diameter on the upper 50 percent of the visible surface, or reasonably well-spaced knots up to 4 cm in diameter over all the visible surface.

3. On logs 25 cm or over in radius there must be no more than occasional knots up to 8 cm in diameter on the upper 50 percent of the visible surface, or reasonably well-spaced knots up to 5 cm in diameter on the upper 66 2/3 percent of the visible surface, or reasonably well-spaced knots up to 4 cm in diameter over all the visible surface.

4. Maximum twist permitted over 30 cm of length is 7 percent of the diameter up to a maximum deviation of 8 cm.

5. Insect or worm holes other than ambrosia must not penetrate beyond the sap wood.

6. Butt rot, checks, conk, conk stain, crook, heart rot, oversized knots, pitch pockets, pocket rot, ring shake, sap rot, shatter, splits, sweep, or other defects are permitted providing the portion of the log free from these defects is sufficient to meet the grade rule.

10.4.7.6 No. 3 Sawlog Spruce, Grade Code I

10.4.7.6.1 Grade Rule

A log 4 m or more in length and

- 19 cm or more in radius where:
  - at least 75 percent of the gross scale can be manufactured into lumber and at least 50 percent of that lumber will be merchantable, or
  - otherwise grade code H, where less than 75 percent but at least 50 percent of the gross scale can be manufactured into lumber and at least 65 percent of that lumber will be merchantable, or
- 25 cm more in radius where at least 50 percent of the gross scale can be manufactured into lumber and at least 50 percent of that lumber will be merchantable.

10.4.7.6.2 Log Requirements to Make the Grade

1. By log radii, maximum knot size diameters that should not prevent the manufacture of the lumber requirements of the grade are:

Log radius	Knot size diameter
19 - 24 cm	8 cm
25 - 37 cm	9 cm
38 - 49 cm	10 cm
50 + cm	13 cm

2. Maximum twist permitted over 30 cm of length is 10 percent of the diameter up to a maximum deviation of 9 cm.

3. Bunch knots, butt rot, checks, conk, conk stain, crook, heart rot, insect holes, loose knots, oversized knots, pitch pockets, pocket rot, ring shake, rotten knots, sap rot, shatter, splits, sweep, or other defects are permitted providing the portion of the log free from these defects is sufficient to meet the grade rule.

10.4.8 No. 4 Sawlog All Coniferous, Grade Code J

10.4.8.1 Grade Rule

For a cypress and spruce log 4 m or more in length, for all other coniferous 5 m or more in length and 8 to 18 cm in radius where at least 75 percent of the gross scale can be manufactured into lumber and at least 50 percent of that lumber will be merchantable.

10.4.8.2 Log Requirements to Make the Grade

1. By log radii, maximum knot size diameters that should not prevent the manufacture of the lumber requirements of the grade are:

Log radius	Knot size diameter
8 - 13 cm	4 cm
14 - 18 cm	6 cm

2. Maximum twist permitted over 30 cm of length is 10 percent of the diameter.

3. Butt rot, butt shakes, checks, conk, conk stain, crook, goitre, heart rot, loose knots, oversized knots, pocket rot, rotten knots, sap rot, shatter, splits, sweep, or other defects are permitted providing the portion of the log free from these defects is sufficient to meet the grade rule.

10.4.9 No. 5 Utility All Coniferous, Grade Code U

10.4.9.1 Grade Rule

A log:

- 5 m or more in length, and
    - 5 to 7 cm in radius where at least 75 percent of the gross scale can be manufactured into lumber, or
    - 8 to 18 cm in radius where at least 66 2/3 percent of the gross scale can be manufactured into lumber, or
- 3.8 m or more in length and 19 cm or more in radius where at least 50 percent of the gross scale can be manufactured into lumber and at least 35 percent of that lumber will be merchantable.

10.4.9.2 Log Requirements to Make the Grade

1. By log radii, maximum knot size diameters that should not prevent the manufacture of the lumber requirements of the grade are:

Log radius	Knot size diameter
5 - 7 cm	4 cm
8 - 13 cm	6 cm
14 - 18 cm	8 cm
19 - 24 cm	10 cm
25 - 37 cm	12 cm
SP only 38 - 49 cm	14 cm
SP only 50 + cm	16 cm

2. Maximum twist permitted over 30 cm of length is 13 percent of the diameter up to a maximum deviation of 13 cm.

3. Butt rot, butt shake, checks, conk, conk stain, crook, goitre, heart rot, loose knots, oversized knots, pocket rot, rotten knots, sap rot, splits, shatter, sweep, and other defects are permitted providing the portion of the log free from these defects is sufficient to meet the grade rule.

10.4.10 No. 6 Utility All Coniferous, Grade Code X

10.4.10.1 Grade Rule

A log 3 m or more in length and 5 cm or more in radius where at least 33 1/3 percent of the gross scale can be manufactured into lumber and at least 35 percent of that lumber will be merchantable.

10.4.10.2 Log Requirements to Make the Grade

1. By log radii, maximum knot size diameters that should not prevent the manufacture of the lumber requirements of the grade are:

Log radius	Knot size diameter
5 - 7 cm	4 cm
8 - 13 cm	6 cm
14 - 18 cm	8 cm
19 - 24 cm	10 cm
25 - 37 cm	12 cm
38 - 49 cm	14 cm
SP only 50 + cm	16 cm

   Logs 25 cm and over in radius will allow oversize knots up to a maximum of two per 3 m of log length.

2. Maximum twist permitted over 30 cm of length is 13 percent of the diameter up to a maximum deviation of 13 cm.

3. Butt rot, butt shake, checks, conk, conk stain, crook, goitre, heart rot, loose knots, oversized knots, pocket rot, rotten knots, sap rot, splits, shatter, sweep, and other defects are permitted providing the portion of the log free from these defects is sufficient to meet the grade rule.

10.4.11 No. 7 Chipper All Coniferous, Grade Code Y

10.4.11.1 Grade Rule

Logs lower in grade than utility and higher in grade than firmwood reject.

10.5 Broadleaf Species And Yew

10.5.1 Applicability

The grades apply to all hardwood (i.e., deciduous) species harvested on the coast and to yew (Taxus brevifolia).

10.5.2 Sawlog, Grade Code W

10.5.2.1 Grade Rule

A log 2.6 m or more in length and 5 cm or more in radius, where at least 50 percent of the gross scale can be manufactured into merchantable lumber.

10.5.2.2 Log Requirements to Make the Grade

1. By log radii, maximum knot size that should not prevent the manufacture of the lumber requirements of the grade are:

Log radius	Knot size diameter
5 - 7 cm	4 cm
8 - 13 cm	6 cm
14 - 18 cm	8 cm
19 - 24 cm	10 cm
25 - 37 cm	12 cm
38 + cm	14 cm

2. Maximum twist permitted over 30 cm in length is 10 percent of the diameter up to a maximum deviation of 9 cm.

3. Adventitious knots, bunch knots, burls, butt rot, checks, conk, conk stain, crook, heart rot, insect holes, loose knots, oversize knots, pocket rot, ring shake, rotten knots, sap rot, shatter, splits, sweep, or other defects, are permitted providing the portion of the log free from these defects is sufficient to meet the grade rule.

10.5.2.3 Chipper, Grade Code Y

10.5.2.3.1 Grade Rule

A log lower in grade than grade W, but higher in grade than firmwood reject.

10.6 Applying the Principles of Grading Using Field Methods

The following methods for calculating grade reduction may be substituted for methods described in the *Timber Grading* chapter – Section 8.4: Apply the Principles of Grading.

The formulas describe three field methods for three distinct types of defect situations and includes a description of where each may be used. They express the grade reduction (GR) in terms of log length. The length of the grade reduction is then compared to the gross length of the log to determine the grade reduction percentage.

- Formula #1 (non0conical defects):

$$\frac{\text{UV of lumber loss}}{\text{average UV for the log}} \times \text{length of defect} = \text{GR length in metres}$$

(follow Formula #1 with Formula #3 to convert GR in metres to a percent)

- Formula #2 (cone-shape defects):

$$\frac{\text{UV of lumber loss}}{\text{average UV for the log}} \times \frac{\text{length of defect}}{3} \times 2 = \text{GR length in metres}$$

(follow Formula #2 with Formula #3 to convert GR in metres to a percent), and

- Formula #3

$$\frac{\text{length of GR}}{\text{log length}} \times 100 = \text{GR\%}$$

10.6.1 Formula #1

This formula is used when the linear portion of the log affected by defect is partially suitable to cut lumber and part grade reduction.

This formula may not be used for conical defects such as butt rot and water shake (see Formula #2).

The UV of lumber loss is the unit volume for the log end area unsuitable to cut a product, including trim allowance where applicable.

Where the defect has different sizes on either ends, as with full-length defects, the average of the two end volumes is used for the UV lumber loss.

The ‘average UV of the log’ is the average of the unit volumes for the top and butt diameters. For practical purposes, the UV for the average diameter may be used for most logs, but the accuracy of this shortcut decreases as taper increases.

The formula expresses the grade reduction in log length. That length is then compared to gross log length (as described in Formula #3) to obtain the percentage of the gross log that is grade reduction.

Examples of types of defects for which this formula may be used are heart rot, ring rot, pocket rot, ring shake, checks and sap rot.

10.6.2 Formula #2

This formula is used with butt rot and butt shake where the defect doesn't show in the top end of the log.

The 'UV of lumber loss is the unit volume for the base diameter of the defective area when viewed in terms of suitability to cut product. For irregular and scattered defect, that diameter will often be significantly larger than what would be used for a firmwood deduction.

The 'UV of lumber loss" does not include trim allowance or collars too thin to cut product when using this formula.

Once the 'UV of lumber loss is established, the grade reduction is the same as a firmwood deduction would be, except that the result is doubled

The 'average UV of the log' is the average of the unit volumes for the top and butt diametres. The alternative of using unit volumes of the average diameter becomes less accurate as the taper increases.

This formula expresses the grade reduction in log length, which is then compared to the gross length (as described in Formula #3) to obtain the percentage of the grade reduction.

Where the defect shows through to the top end Formula #1 is used. The 'UV of lumber loss' is the unit volume for the average of the two defect diameters plus trim.

10.6.3 Formula #3

10.6.3.1 For Converting Grade Reduction in Metres to a Percentage

This formula simply converts the length of a log lost to grade reduction to a percent of the gross log length, which is then used as the percent of grade reduction.

When Formula #3 is used to convert length reductions derived from either Formula #1 or Formula #2, it is completely accurate.

10.6.3.2 For Estimating Grade Reduction Percentage from Length Losses

A secondary application of Formula #3 is where an estimated length of log is completely lost for lumber recovery. In those cases the length of the grade reduction portion of the

log is compared to the gross log length (using this formula) to get an estimate of the grade reduction percentage.

Examples of where the formula may be used in this way are hear rot with a collar too thin to cut a product, conk, shatter or breakage, pistol grip or crook, and bark seams.

The procedure of using a direct length comparison without applying a factor to account for the taper of the log (as Formulae #1 and #2 do) is sometimes called the lineal method of grade reduction.

Because log taper is not considered, this method is not precise and the degree of error correlates with the amount of taper in the log. However, the errors tend to compensate over a number of logs and the lineal method is readily adaptable to practical use in scaling.

For the defect situations to which it applies, use of the lineal method is standard practise in coastal scaling for logs with up to 50% taper, or where the butt diameter is not more than 1.5 times the top diameter.

Documenting and Reporting Scale 11

Under the *Forest Act*, the owner of the scale site, the operator of the scale site, the mark holder and the scaler are all individually responsible for submitting the results of the scale in the form of a scale return. This chapter covers a number of related areas:

- an explanation of MOFR Revenue forms and their use,
- timing requirements for submission of scale returns,
- penalties for late submission of scale data,
- electronic submission of scale results,
- data retention requirements,
- data loss,
- changes to scale data, and
- accessibility of scale data to the public.

11.1 Scale Documentation

11.1.1 Introduction

The purpose of this section is to familiarize all users with the submission of the forms used to document the scale and related scaling activities.

Two types of documents are in place:

- the scale return and the documents used to prepare the scale return, and
- other documents which support the scale data control and scaling administration.

Scale Returns, for the purposes of this chapter, include the the original scale tally (or detailed log listing), the weight scale load slips and include any other documentation that is used as the basis for a billing, including summaries. All scaling forms are available along with detailed instructions on their reverse side at:

Public Forms Index

11.1.2 Documentation Conventions

Before detailing each document you should understand the conventions common to completing every document. These conventions include:

Formats	-	Standard formats, set by the ministry help ensure satisfactory control of scale data. All computer generated facsimiles of the scale returns must be approved prior to their use.
Originals	-	In all cases the original signed copy of the scale return must be submitted to the ministry whether using electronic or paper versions.
Legibility	-	All hand-written documents must be legible. Always use a sharp pencil, a pen or fresh printer cartridge when preparing originals for submission.
Scaler's Signature	-	As detailed further in this section the primary or secondary scaler performing the scale is responsible for signing various scale documents, either on the paper return or electronically. For information on how to receive an electronic authentication signature key please refer to HBS at: HBS Public Training Manual
Supporting Documentation	-	Any supporting documentation such as tally sheets, should always be retained at the scale site or attached to the paper scale return.

All documentation must be filed in an orderly manner and submitted to the ministry, or retained in a safe place as per the applicable authorization. This will facilitate retrieval if required for review by a Forest Officer.

> It is the obligation of the scaler, the site operator, and the computing service to ensure they are aware of all documentation requirements including retention and submission as per the scaler authorization, the scale site authorization, and/or computing authorization.

Contact the local Ministry of Forests and Range office if clarification on the completion or submission requirements of any document is required. For information on using commonly misinterpreted characters please refer to Section 2.1.4 of the Timber Marking and Branding chapter of the Scaling Manual.

11.1.3 Electronic Reporting

As per the *Forest Act* (s.97) and the *Scaling Regulation* (s.12), if a licensee is scaling over 500 m^3 of timber a year the scale data should be submitted electronically to the HBS either by electronic file transfer or entered online in the designated screen(s) on the HBS web site.

While no paper copies of the scale details are required when they are submitted electronically to the HBS, there are some reports that must be printed out and kept at the scale site or sent to the district MOFR office as a backup.

If a licensee is scaling less than 500 m3 of timber a year they are permitted to manually record the scale information on the designated Forest Service paper forms and submit them to their district MOFR office or forwarded to Victoria to be manually entered into HBS.

> Required documentation may vary slightly by district.

11.2 Scale Returns

Standard scale return forms and their computer generated equivalents are required to ensure scale data are captured in an orderly manner and the format is compatible with the processing phase of scale billing which ultimately results in invoices being issued.

All scale return tallies produced manually (hand-written) must be legible and signed by the scaler performing the scale. Scale returns are a key component of the documentation trail used for auditing and checking purposes. As such, any changes made by the scaler should always be initialled by the scaler making the return. Any changes made by the ministry must follow the conventions set under Section 11.6.

11.2.1 Type of Scale

- The method of scaling largely predicates documentation requirements. These methods are:

Piece Scale Documentation

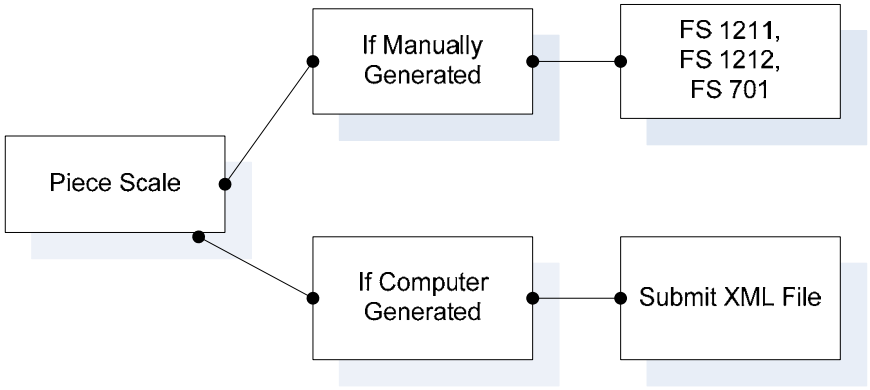

11.2.1.1 FS 1211 - Piece Scale Detailed Log Listing (NET)

This form must be used to record the piece scale details and red tag scale details for timber that must be reported to HBS. The main use of this form is to submit scale returns under Section 97 of the Forest Act. It may also be used for scaled before rescale and company use. Use scale returns if these types of returns will consume a scaler return number.

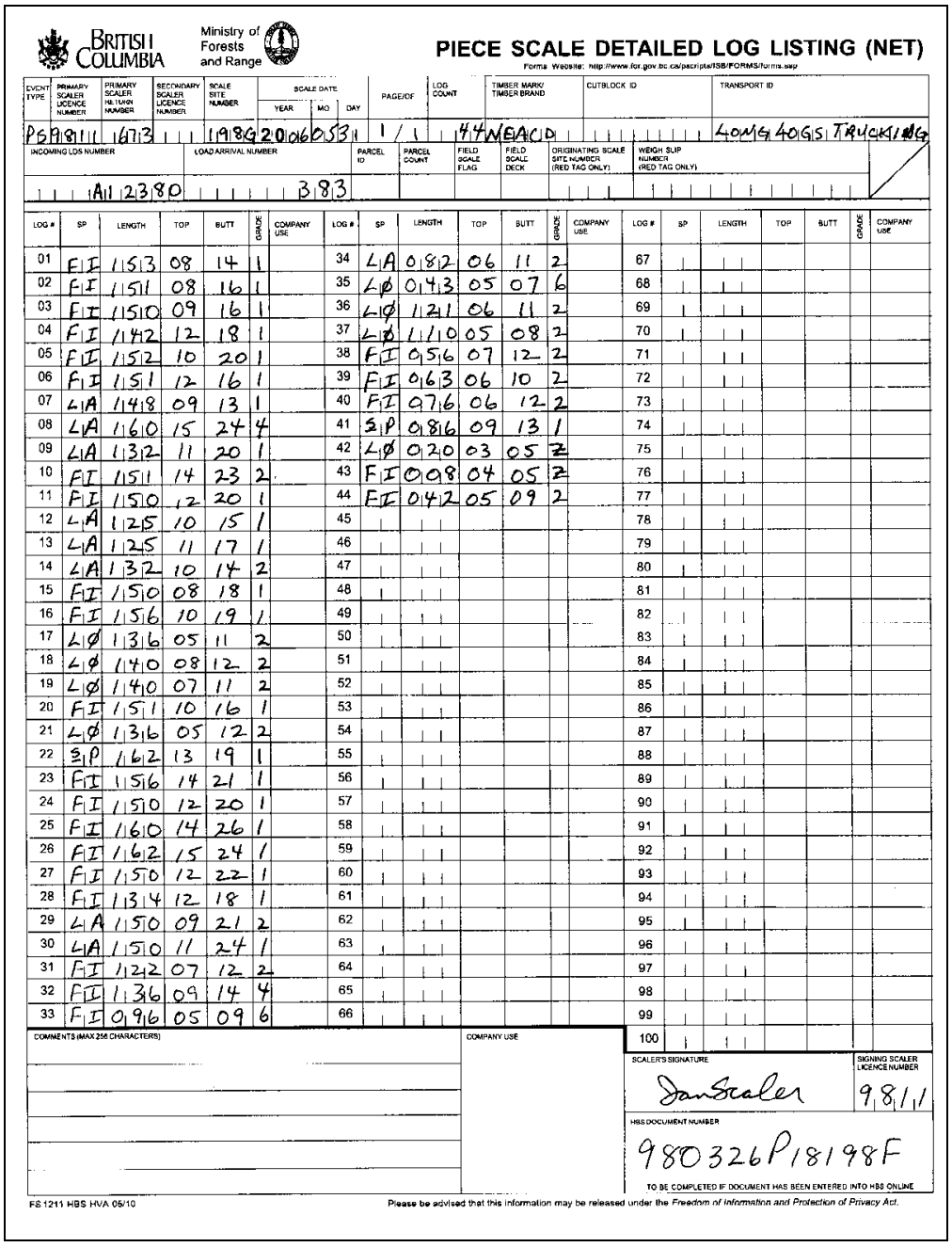

BRITISH COLUMBIA — Ministry of Forests and Range

PIECE SCALE DETAILED LOG LISTING (NET)

Forms Website: http://www.for.gov.bc.ca/pscripts/ISB/FORMS/forms.asp

EVENT TYPE	PRIMARY SCALER LICENCE NUMBER	PRIMARY SCALER RELATION NUMBER	SECONDARY SCALER LICENCE NUMBER	SCALE SITE NUMBER	SCALE DATE YEAR	MO	DAY	PAGE/OF	LOG COUNT	TIMBER MARK/ TIMBER BRAND	CUTBLOCK ID	TRANSPORT ID
PS	9811	1673		1986	20	06	05	1 / 1	44	NEACD		LOWG 40GS TRUCK 106

INCOMING LOS NUMBER	LOAD ARRIVAL NUMBER	PARCEL ID	PARCEL COUNT	FIELD SCALE FLAG	FIELD SCALE DECK	ORIGINATING SCALE SITE NUMBER (RED TAG ONLY)	WEIGH SLIP NUMBER (RED TAG ONLY)
A11238O	383						

LOG #	SP	LENGTH	TOP	BUTT	GRADE	COMPANY USE	LOG #	SP	LENGTH	TOP	BUTT	GRADE	COMPANY USE	LOG #	SP	LENGTH	TOP	BUTT	GRADE	COMPANY USE
01	FI	1513	08	14	1		34	LA	0812	06	11	2		67						
02	FI	1511	08	16	1		35	LØ	0713	05	07	6		68						
03	FI	1510	09	16	1		36	LØ	1211	06	11	2		69						
04	FI	1412	12	18	1		37	LØ	1110	05	08	2		70						
05	FI	1512	10	20	1		38	FI	0516	07	12	2		71						
06	FI	1511	12	16	1		39	FI	0613	06	10	2		72						
07	LA	1418	09	13	1		40	FI	0716	06	12	2		73						
08	LA	1610	15	24	4		41	SP	0816	09	13	1		74						
09	LA	1312	11	20	1		42	LØ	0720	03	05	2		75						
10	FI	1511	14	23	2		43	FI	0908	04	05	2		76						
11	FI	1510	12	20	1		44	FI	0412	05	09	2		77						
12	LA	1225	10	15	1		45							78						
13	LA	1225	11	17	1		46							79						
14	LA	1312	10	14	2		47							80						
15	FI	1510	08	18	1		48							81						
16	FI	1516	10	19	1		49							82						
17	LØ	1316	05	11	2		50							83						
18	LØ	1410	08	12	2		51							84						
19	LØ	1410	07	11	2		52							85						
20	FI	1511	10	16	1		53							86						
21	LØ	1316	05	12	2		54							87						
22	SP	1612	13	19	1		55							88						
23	FI	1516	14	21	1		56							89						
24	FI	1510	12	20	1		57							90						
25	FI	1610	14	26	1		58							91						
26	FI	1612	15	24	1		59							92						
27	FI	1510	12	22	1		60							93						
28	FI	1314	12	18	1		61							94						
29	LA	1510	09	21	2		62							95						
30	LA	1510	11	24	1		63							96						
31	FI	1212	07	12	2		64							97						
32	FI	1316	09	14	4		65							98						
33	FI	0916	05	09	6		66							99						
														100						

COMMENTS (MAX 256 CHARACTERS)

COMPANY USE

SCALER'S SIGNATURE: DanScaler

SIGNING SCALER LICENCE NUMBER: 9811

HBS DOCUMENT NUMBER: 980326P18198F

TO BE COMPLETED IF DOCUMENT HAS BEEN ENTERED INTO HBS ONLINE

FS 1211 HBS HVA 05/10

Please be advised that this information may be released under the *Freedom of Information and Protection of Privacy Act*.

Figure 11.1 FS 1211 – Piece Scale Detailed Log Listing (NET).

11.2.1.2 FS 1212 - Beachcomb Piece Scale Detailed Log Listing (NET)

This form is to be used to record the scale details of Marine Salvage timber only. Only net dimensions will be recorded on this, the FS 1211, and the FS 1210.

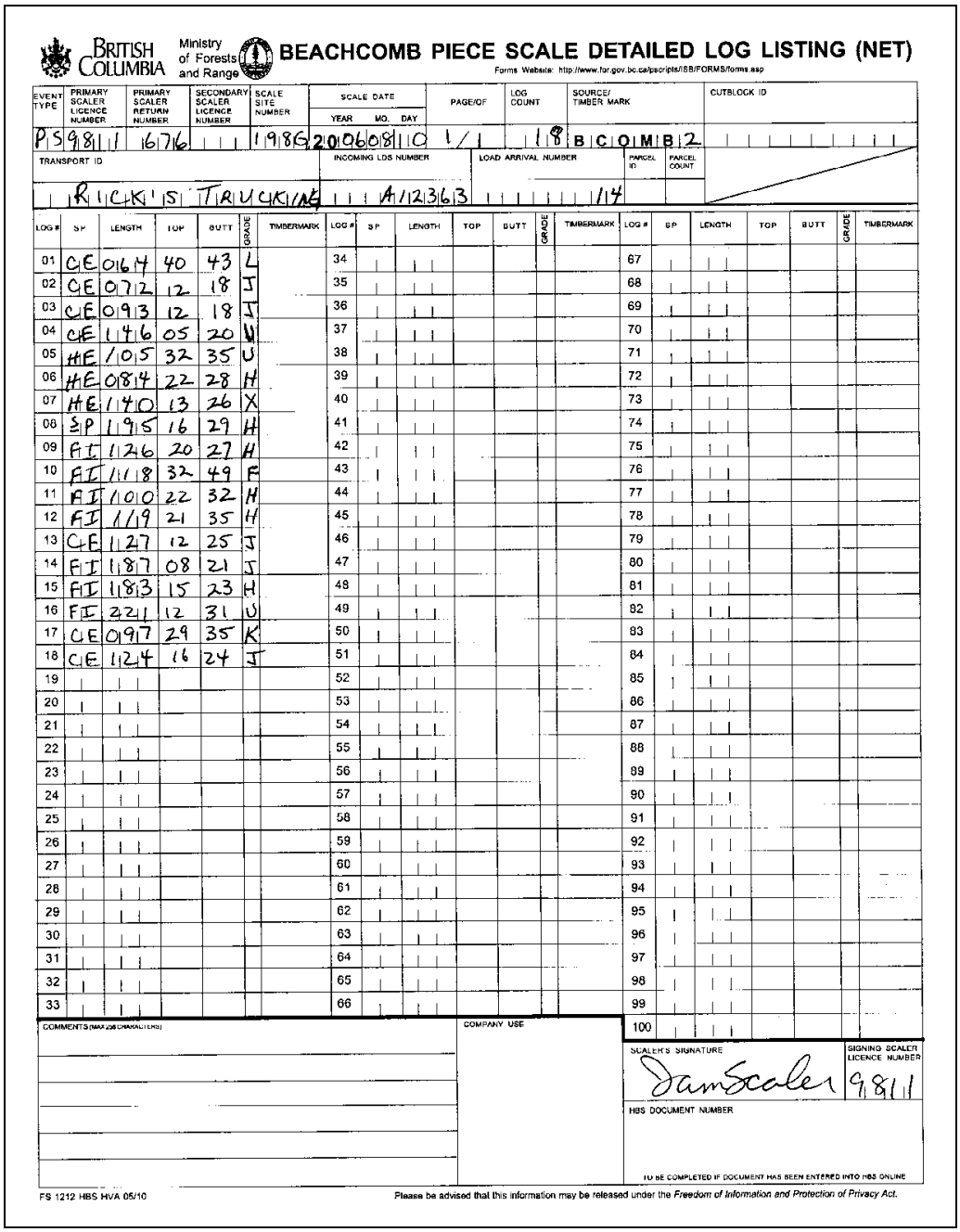

BRITISH COLUMBIA Ministry of Forests and Range

BEACHCOMB PIECE SCALE DETAILED LOG LISTING (NET)

Forms Website: http://www.for.gov.bc.ca/pscripts/ISB/FORMS/forms.asp

EVENT TYPE	PRIMARY SCALER LICENCE NUMBER	PRIMARY SCALER RETURN NUMBER	SECONDARY SCALER LICENCE NUMBER	SCALE SITE NUMBER	SCALE DATE YEAR	MO.	DAY	PAGE/OF	LOG COUNT	SOURCE/ TIMBER MARK	CUTBLOCK ID
P	S9811	1676		1986	2010	06	08	1/1	18	BCOMB2	

TRANSPORT ID	INCOMING LOS NUMBER	LOAD ARRIVAL NUMBER	PARCEL ID	PARCEL COUNT
RICK'S TRUCKING	A/12363	14		

LOG #	SP	LENGTH	TOP	BUTT	GRADE	TIMBERMARK
01	CE	0164	40	43	L	
02	CE	0712	12	18	J	
03	CE	0913	12	18	J	
04	CE	1146	05	20	U	
05	HE	1015	32	35	U	
06	HE	0814	22	28	H	
07	HE	1140	13	26	X	
08	SP	1195	16	29	H	
09	FI	1126	20	27	H	
10	FI	1118	32	49	F	
11	FI	1010	22	32	H	
12	FI	119	21	35	H	
13	CE	1127	12	25	J	
14	FI	1187	08	21	J	
15	FI	1183	15	23	H	
16	FI	2211	12	31	U	
17	CE	0917	29	35	K	
18	CE	1124	16	24	J	
19						
20						
21						
22						
23						
24						
25						
26						
27						
28						
29						
30						
31						
32						
33						
34						
35						
36						
37						
38						
39						
40						
41						
42						
43						
44						
45						
46						
47						
48						
49						
50						
51						
52						
53						
54						
55						
56						
57						
58						
59						
60						
61						
62						
63						
64						
65						
66						
67						
68						
69						
70						
71						
72						
73						
74						
75						
76						
77						
78						
79						
80						
81						
82						
83						
84						
85						
86						
87						
88						
89						
90						
91						
92						
93						
94						
95						
96						
97						
98						
99						
100						

COMMENTS (MAX 256 CHARACTERS)

COMPANY USE

SCALER'S SIGNATURE: DamScaler

SIGNING SCALER LICENCE NUMBER: 9811

HBS DOCUMENT NUMBER

TO BE COMPLETED IF DOCUMENT HAS BEEN ENTERED INTO HBS ONLINE

FS 1212 HBS HVA 05/10

Please be advised that this information may be released under the *Freedom of Information and Protection of Privacy Act.*

Figure 11.2 FS 1212 – Beachcomb Piece Scale Detailed Log Listing.

Weight scale Documentation

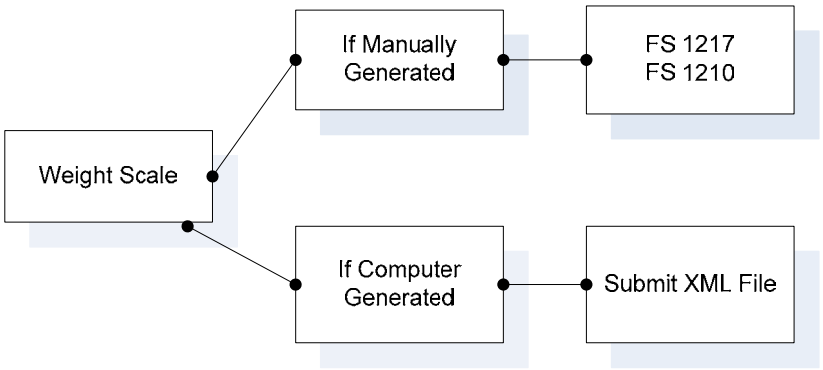

There are two standard weight scale forms:

- FS 1217 - Weigh Slip
- FS 1210 - Sample Scale Detailed Log Listing (NET)

11.2.1.3 FS 1217 - Weight Slip

This form is used to manually record the details of a weight scale transaction.

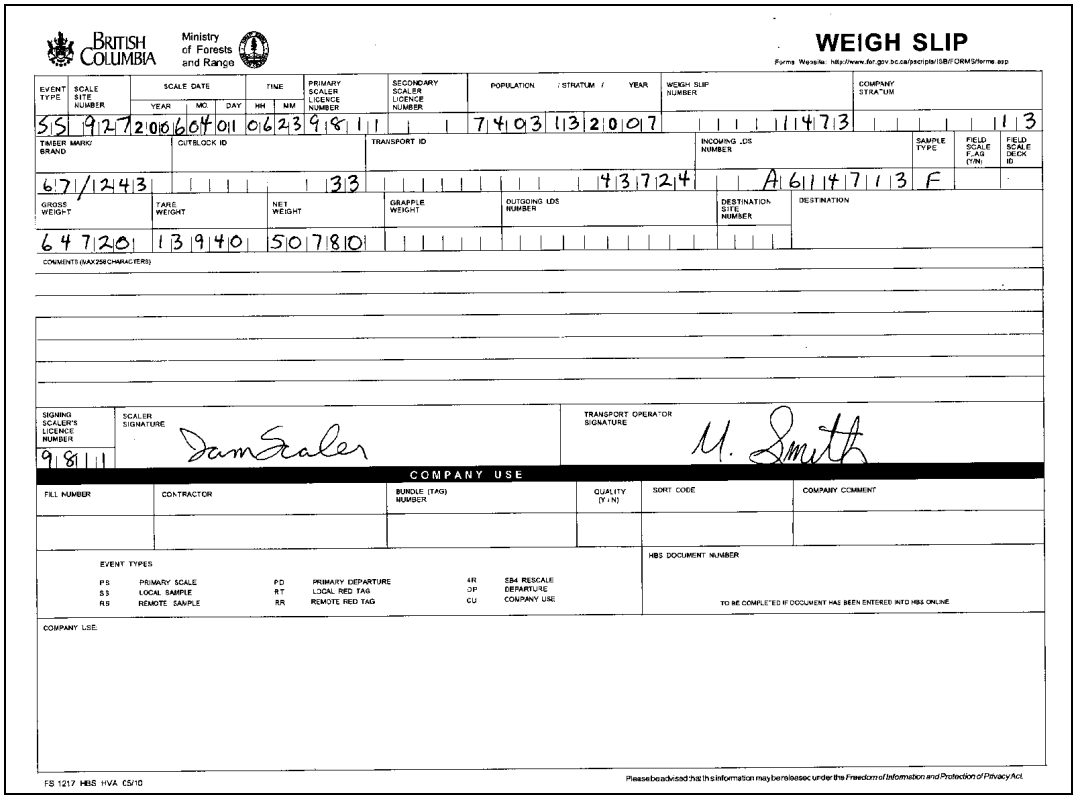

Figure 11.3 FS 1217 – Weigh Slip.

11.2.1.4 FS 1210 - Sample Scale Detailed Log Listing (NET)

This form is used to record the scale details of a sample scale load. Instructions are on the reverse side of the form.

BRITISH COLUMBIA — Ministry of Forests and Range

SAMPLE SCALE DETAILED LOG LISTING (NET)

Forms Website: http://www.for.gov.bc.ca/pscripts/ISB/FORMS/forms.asp

EVENT TYPE	PRIMARY SCALER LICENCE NUMBER	PRIMARY SCALER RETURN NUMBER	SECONDARY SCALER LICENCE NUMBER	SCALE SITE NUMBER	SCALE DATE YEAR	MO.	DAY	PAGE/OF	LOG COUNT	TIMBER MARK	WEIGH SLIP NUMBER
S	59811	6714		1927	2006	04	03	1/1	44	67/2443	14713

POPULATION	STRATUM	YEAR	SAMPLE WEIGHT (KG)	TRANSPORT ID (REMOTE ONLY)	INCOMING LOG NUMBER (REMOTE ONLY)	LOAD ARRIVAL NUMBER (REMOTE ONLY)	ORIGINATING SCALE SITE NUMBER (REMOTE ONLY)
7	40	3	13 2007	50780			

LOG #	SP	LENGTH	TOP	BUTT	GRADE	COMPANY USE
01	LP	16.8	14	18	1	
02	LP	16.4	12	18	1	
03	LP	15.9	10	14	1	
04	LP	16.1	10	15	1	
05	SP	15.8	10	18	1	
06	SP	16.3	12	16	1	
07	SP	16.4	10	20	2	
08	SP	16.6	12	22	1	
09	SP	15.9	13	17	1	
10	SP	15.4	15	20	1	
11	SP	15.1	12	18	1	
12	SP	15.2	14	22	1	
13	SP	16.5	16	24	1	
14	SP	16.3	16	23	1	
15	SP	15.7	14	19	1	
16	SP	15.3	15	22	2	
17	SP	16.9	16	20	1	
18	SP	17.2	18	28	1	
19	SP	16.8	18	24	1	
20	SP	16.8	17	25	1	
21	SP	16.7	16	26	1	
22	SP	16.8	14	24	1	
23	SP	16.9	15	21	1	
24	SP	16.8	15	20	1	
25	SP	16.5	14	21	1	
26	SP	16.6	18	26	1	
27	SP	16.8	19	28	1	
28	SP	15.9	15	20	1	
29	SP	06.8	08	12	2	
30	SP	12.1	05	08	6	
31	SP	09.8	05	07	6	
32	SP	10.2	08	14	1	
33	SP	06.4	10	13	1	
34	SP	05.6	05	10	2	
35	SP	06.2	06	08	2	
36	SP	04.2	05	08	2	
37	SP	05.4	07	10	2	
38	LP	03.2	05	07	4	
39	LP	05.4	05	08	4	
40	LP	06.6	05	09	2	
41	LP	05.2	05	08	2	
42	LP	02.0	03	05	2	
43	LP	01.3	03	05	2	
44	LP	01.2	04	05	2	
45						
46						
47						
48						
49						
50						
51						
52						
53						
54						
55						
56						
57						
58						
59						
60						
61						
62						
63						
64						
65						
66						
67						
68						
69						
70						
71						
72						
73						
74						
75						
76						
77						
78						
79						
80						
81						
82						
83						
84						
85						
86						
87						
88						
89						
90						
91						
92						
93						
94						
95						
96						
97						
98						
99						
100						

COMMENTS (MAX 256 CHARACTERS)

COMPANY USE

SCALER'S SIGNATURE: Dan Scaler

SIGNING SCALER LICENCE NUMBER: 98111

HBS DOCUMENT NUMBER

TO BE COMPLETED IF DOCUMENT HAS BEEN ENTERED INTO HBS ONLINE

FS 1210 HBS HVA 05/10

Please be advised that this information may be released under the *Freedom of Information and Protection of Privacy Act*.

Figure 11.4 FS 1210 – Sample Scale Detailed Log Listing (NET).

11.2.2 Electronic Weight Scale Documentation/Reports

If a scale site is scaling over 500 m3 of timber a year the Regional Executive Director may direct that scale data be submitted electronically to the HBS either by electronic file transfer or entered online in the designated screen(s) on the HBS web site.

If sample loads are being recorded in a handheld computer it must indicate the event type: SS – Sample Scale. When complete the load is to be digitally signed, then transmitted to the HBS.

There are three required reports for weight scale sites using electronic data submission. They are:

Report Name	Report Purpose	Disposition
Safety Sheet	Recreate the scale information in the event of computer breakdown	Retained for a period at scale site
Weight Slip	Recreate the scale information in the event of a computer breakdown	Retained for a period at scale site
Daily Audit Log	Record of change to scale data Printed daily and matched to paper LDS documents	Submitted to the Ministry

The first two are interchangeable. The Ministry prefers that the Safety Sheet is used. However, if this report is not supported by the scale site software, weight slips must be printed after every load is weighed in.

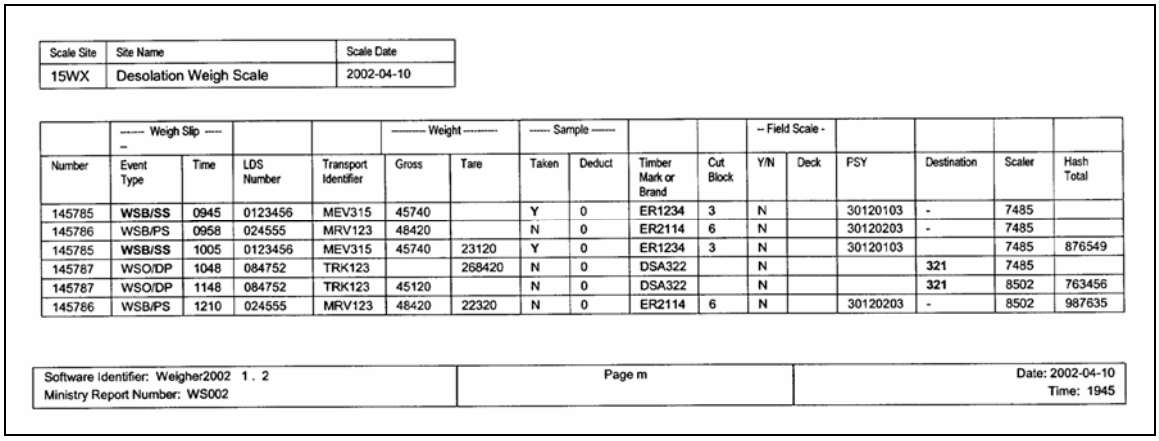

Scale Site	Site Name	Scale Date
15WX	Desolation Weigh Scale	2002-04-10

	Weigh Slip				Weight		Sample				Field Scale					
Number	Event Type	Time	LDS Number	Transport Identifier	Gross	Tare	Taken	Deduct	Timber Mark or Brand	Cut Block	Y/N	Deck	PSY	Destination	Scaler	Hash Total
145785	**WSB/SS**	0945	0123456	MEV315	45740		Y	0	ER1234	3	N		30120103	-	7485	
145786	WSB/PS	0958	024555	MRV123	48420		N	0	ER2114	6	N		30120203	-	7485	
145785	**WSB/SS**	1005	0123456	MEV315	45740	23120	Y	0	ER1234	3	N		30120103		7485	876549
145787	WSO/DP	1048	084752	TRK123		268420	N	0	DSA322		N			**321**	7485	
145787	WSO/DP	1148	084752	TRK123	45120		N	0	DSA322		N			**321**	8502	763456
145786	WSB/PS	1210	024555	MRV123	48420	22320	N	0	ER2114	6	N		30120203	-	8502	987635

Software Identifier: Weigher2002 1 . 2
Ministry Report Number: WS002

Page m

Date: 2002-04-10
Time: 1945

Figure 11.5 Weight Scale Safety Sheet Example.

Safety Sheet Definition

This report contains a record of all events that occur at the scale site in CHRONOLOGICAL order. It is expected that the record of events is printed AT THE SAME TIME as the event's occurrence. The purpose of this report is to be able to recreate the scale information in the event of computer breakdown. If the Safety Sheet is being used then weight slips will not be expected to be printed.

Safety Sheet Print Expectations

The "Safety Sheet" is printed on a continuous basis. This means that for every weighing (weigh in, tare, company use) a line is generated on the report AS THE EVENT IS RECORDED IN THE COMPUTER. This means that two printers may be required at a scale site that also prints weight slips for their own purposes. If two printers are not available then option "Weight Slips" will be suitable if an interim version of the slip is printed after the weigh in event.

Safety Sheet Submission and Retention Expectations

When used, the paper "Safety Sheet" is NOT expected to be submitted to the ministry. When used, the paper "Safety Sheet" is expected to be retained by the scale site operator for a period of six months. During this time this report must be provided to a forest officer upon request.

Daily Audit Log

Scale Site	Site Name	Scale Date
15WX	Desolation Weigh Scale	2002-04-10

------ Weigh Slip ------					---------- Weight ----------		------ Sample ------				-- Field Scale -						------- Edit ------		
Number	Event Type	Time	LDS Number	Transport Identifier	Gross	Tare	Taken	Deduct	Timber Mark or Brand	Cut Block	Y/N	Deck	PSY	Destination	Scaler	Time	Date	Hash Total
	WSB/PS						N											
145785	**WSB/SS**	0945	0123456	MEV315	45740	23120	Y	0	ER1234	3	N		30120103	-	7485	1304	04-11	876549
									ER1214									
145786	WSB/PS	1545	0123456	MRV123	484200	22320	N	0	**ER2114**	6	N		30120203	-	7485	1306	04-11	987635
														344				
145787	WSO/DP	1048	084752	TRK123	451200	268420	N	0	DSA322		N			**321**	7485	1307	04-11	763456

Software Identifier: Weigher2002 1 2 Ministry Report Number: WS003	Page m of n	Date: 2002-04-10 Time: 1945

Figure 11.6 Weight Scale Daily Audit Log Example.

Daily Audit Log Definition

This report contains a record of all arriving loads at the scale site in WEIGHT SLIP TICKET NUMBER order. This report will detail ALL changes made to data in which the ministry has an interest. It is expected that the last version of the data on the weight slip will match the data submitted. If a weight slip has been deleted this report must highlight that event.

Daily Audit Log Print Expectations

The Daily Audit Log is printed on a daily basis from the weight scale computer. The report is sorted in weight slip ticket number order and shows the audit trail of modifications for each weight slip. There are two scenarios for representing the audit trail for a weight slip:

- *No Edits were made to the Weigh Slip*:

  The report will contain just one line for each Weight Slip that will list the data expected to be on the electronically submitted Weight Slip.

- *The Weight Slip was Edited one or more Times*:

  Each Weight Slip can be edited multiple times. The last line for each Weight Slip will list the data expected to be on the electronically submitted weight slip. For each edit session there will be a line of data provided that lists the original values of the modified fields and the date / time of the modification. If multiple edits are made during a session all original values will be provided on the edit line.

Daily Audit Log Submission Expectations

This report is expected to be submitted to the ministry. As stated previously, it is expected that the report will be printed once a day. All signed paper Load Description Slips (LDS) original forms will be attached to that report in chronological order for the date of original weighing and also submitted.

11.2.2.1 Computer Generated Weight Slip

BRITISH COLUMBIA	Province of British Columbia	Ministry of Forests	Computer Generated Weigh Slip

Scale Date	2001/11/15	Population Stratum Year	3987 19 02
Scale Site	15WX – Desolation Weigh Scale	Gross Weight (kg)	60000
Scaler Licence	531X – Mike Smith	Sample Deduction (kg)	50000
Weigh Slip Number	934688	Tare Weight (kg)	10000
Timbermark/Source	44/16C	Field Scale / Deck	N
Cutblock	0897	Outgoing LDS	
Transport Identifier	TR160	Destination	
Load Description Slip Number	AB1239	Comments	
Sample Indicator	N		
Secondary Scaler Licence	5319 – Alice Smyth		
Company Use	.....		

Scaler Signature	Driver's Signature

Software Product	Weigher2002 1 . 2
EC – Detail Document Number	SD674EW98TER2
EC – Document Version	1
EC – Hash Total	28945455
EC – Digital Signature	76567788
Event Type	PS – Primary Scale
Ministry Report Number	WS001

Figure 11.7 Weight Slip Example.

Weight Slip Definition

It is recognized that there will be company use information included on the documents as well. The purpose of this report for the ministry is to be able to recreate the scale information in the event of computer breakdown. If the Safety Sheet is not being used then the weight slip is suitable if an interim version of the slip is printed after the 'weigh in' event.

Weight Slip Print Expectations

The tare weighing occurs shortly after the weigh in event. A Weight Slip is expected to be printed for each arriving load at the time of the tare weighing if the Safety Sheet is NOT being used.

Tare Weighing and Weigh In are Separated

The tare weighing occurs some time after the weigh in event. Typically in this situation, the timber on the truck is sent to another scale site (sample to be measured elsewhere). The truck must then return to the original scale site for the tare weighing. A Weight Slip is expected to be printed for each arriving load after the tare weighing if the Safety Sheet is NOT being used. An interim version of the slip may be printed after the weigh in event.

Weight Slip Corrections

At any point after the tare weighing, a scaler may correct data.

Weight Slip Digital Signing

Digital Signing will most likely occur as a batch process. Each electronic log tally submitted will be digitally signed by either the weigh-in scaler or the weigh out scaler. There are provisions in the data model for the weigh-in scaler and the weigh out scaler to be different. The Weight Slip is NOT expected to be 'printed and physically signed' after the digital signing event.

Weight Slip Submission and Retention Expectations

When used, the paper Weight Slip is NOT expected to be submitted to the ministry if a safety sheet is being used. When used, the paper Weight Slip is expected to be retained by the scale site operator for a period of six months. During this time these must be provided to a forest officer upon request.

Special Forest Products Documentation

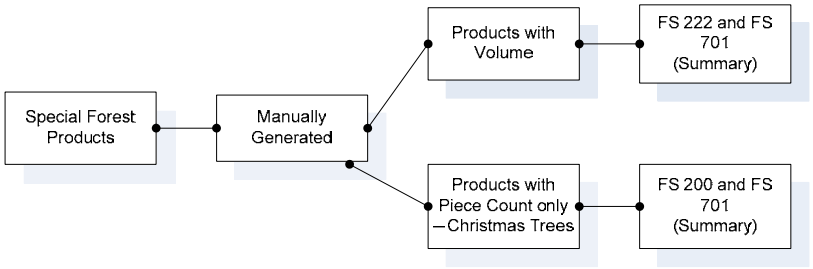

11.2.2.2 FS 222 - Special Forest Products Scale Return and Transportation Document

This form is used to record the details of the following special forest products:

- Shake and Shingle Bolts, Blocks and Blanks,
- Shakes,
- Firewood,
- Mining Timbers,
- Stakes and Sticks,
- Cants,
- Posts and Rails (Split and Round).

BRITISH COLUMBIA

SPECIAL FOREST PRODUCTS SCALE RETURN AND TRANSPORTATION DOCUMENT

P 1234

TIMBER MARK: NEACD	GEOGRAPHIC LOCATION OF TIMBER ORIGIN: Slocan		
CONTRACTOR: CD Shakes Ltd	BLOCK / LANDING / SETTING	HAUL DISTANCE: 62km	
CARRIER COMPANY NAME: Sunrise Trucking Ltd	VEHICLE LICENSE NO.: LD 1246970		
TRANSPORT OPERATOR'S NAME: John Smith	TRANSPORT OPERATOR'S SIGNATURE: John Smith		
DATE OF TRANSPORT YY MM DD: 06 07 21	TIME: 0615	DESTINATION OF SPECIAL FOREST PRODUCTS: ACME CEDAR PRODUCTS	
PURCHASER: ACME CEDAR PRODUCTS	VENDOR OR AGENT'S SIGNATURE		
SCALER'S LICENSE #: 9811	PLACE OF SCALING: ACME Yard A5X		
VENDOR: T. Robbins	SCALER'S RETURN #: 652	SCALER'S SIGNATURE: Sam Scaler	
DATE OF SCALING YY MM DD: 06 07 22	IF PREVIOUSLY SCALED PROVIDE ORIGINAL SCALER'S LICENCE #	RETURN #	DATE OF ORIGINAL SCALE

DESCRIPTION	LENGTH OR # SQUARES	WIDTH OR # BUNDLES	HEIGHT OR # PIECES	FAC TOR	METRES³
Block 1 CESB	2.44	.6	1.8	.8	2.108
Block 2 CESB	2.45	.6	1.85	.8	2.176

DISTRIBUTION: WHITE - MOF (copy of scale attached); CANARY - TRANSPORTER; PINK - VENDOR/CONTRACTOR; GREEN - REMAIN IN BOOKLET

FS 222 HVA 01/05 Please be advised that this information may be released under the *Freedom of Information and Protection of Privacy Act*.

WHEN TO USE FORM FS 222

Do not use this form as a Record of Scale for products scaled as logs or for Christmas trees (For Christmas trees use an FS 200).

Use this form as a **Record of Scale** for the following Special Forest Products: car stakes, round fence posts, split fence posts, round fence rails, split fence rails, firewood, grape stakes, hop poles, lagging, orchard props, pickets and palings, shake bolts, blocks and tanks, shakes, shingle bolts or blocks, stakes and sticks.

Use this form as a **transportation document** for Special Forest Products pursuant to the *Timber Marking and Transportation Regulation*.

HOW TO USE FORM FS 222

The objective of this form is to provide evidence that the transporter is carrying an authorized load of special forest products that has been scaled. This form will be administered by a scaler or acting scaler authorized by the Forest District Manager. Contact your District forest Office for specific instructions about using this form.

As a Record of Scale

In the Description section, enter the type of Special forest Product. Include the number of pallets for shake or shingle blocks, e.g., Shingle blocks - 12 pallets.

As a Transportation Document

The transportation portion of the form shall be initiated from the point where transport began and it must be surrendered at the point of delivery.

Date of Transport and Time refer to when transport of the special forest products began.

If Previously Scaled requires the original scaler's license number, return number(s) and date of scale from the original Record of Scale. For previously scaled material where the original Record of Scale is not available, contact the Forest District Office for instructions on how to certify the previously scaled status.

Figure 11.8 Example and Instructions for Completing the Special Forest Products Scale Return and Transportation Document.

11.2.2.3 FS 200 - Christmas Tree Return

Christmas trees are classified as a special forest product, but because they are scaled only using a piece and size count they require a separate form. The FS 200 is the ministry form used in collecting return information on Christmas trees and it also serves as a transport document. The instructions for its completion are on the reverse side.

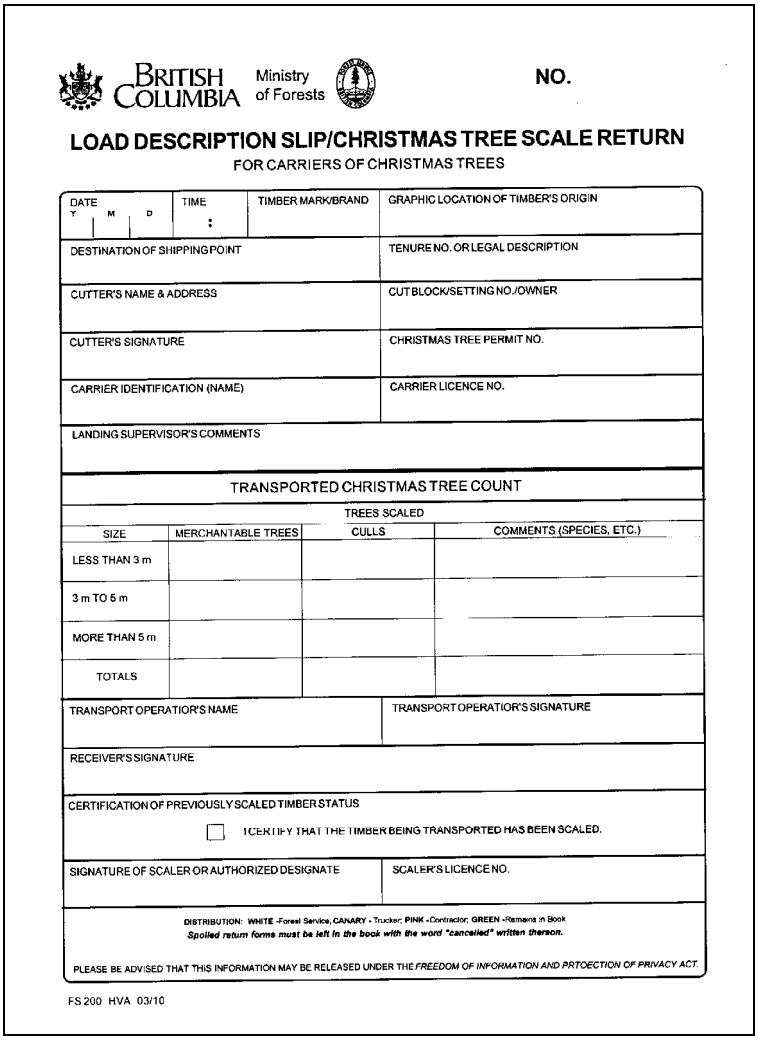

BRITISH COLUMBIA Ministry of Forests

NO.

LOAD DESCRIPTION SLIP/CHRISTMAS TREE SCALE RETURN

FOR CARRIERS OF CHRISTMAS TREES

DATE Y M D	TIME :	TIMBER MARK/BRAND	GRAPHIC LOCATION OF TIMBER'S ORIGIN
DESTINATION OF SHIPPING POINT			TENURE NO. OR LEGAL DESCRIPTION
CUTTER'S NAME & ADDRESS			CUT BLOCK/SETTING NO./OWNER
CUTTER'S SIGNATURE			CHRISTMAS TREE PERMIT NO.
CARRIER IDENTIFICATION (NAME)			CARRIER LICENCE NO.
LANDING SUPERVISOR'S COMMENTS			

TRANSPORTED CHRISTMAS TREE COUNT

	TREES SCALED		
SIZE	MERCHANTABLE TREES	CULLS	COMMENTS (SPECIES, ETC.)
LESS THAN 3 m			
3 m TO 5 m			
MORE THAN 5 m			
TOTALS			

TRANSPORT OPERATIOR'S NAME	TRANSPORT OPERATIOR'S SIGNATURE
RECEIVER'S SIGNATURE	

CERTIFICATION OF PREVIOUSLY SCALED TIMBER STATUS

☐ I CERTIFY THAT THE TIMBER BEING TRANSPORTED HAS BEEN SCALED.

SIGNATURE OF SCALER OR AUTHORIZED DESIGNATE	SCALER'S LICENCE NO.

DISTRIBUTION: WHITE -Forest Service, CANARY - Trucker, PINK -Contractor, GREEN -Remains in Book

Spoiled return forms must be left in the book with the word "cancelled" written thereon.

PLEASE BE ADVISED THAT THIS INFORMATION MAY BE RELEASED UNDER THE *FREEDOM OF INFORMATION AND PRTOECTION OF PRIVACY ACT.*

FS 200 HVA 03/10

Figure 11.9 FS 200 – Load Description Slip/Christmas Tree Scale Return.

11.2.2.4 FS 701 - Volume Estimate - Other

All special forest products must be summarized onto an FS 701. The FS 701 must then be attached to the FS 222 or FS 200 and sent to the Ministry of Forests and Range office required in the scale site authorization. Instructions for completing this form is given on the reverse side. This form is also used to capture other volumes that are estimated, such as fuel logs.

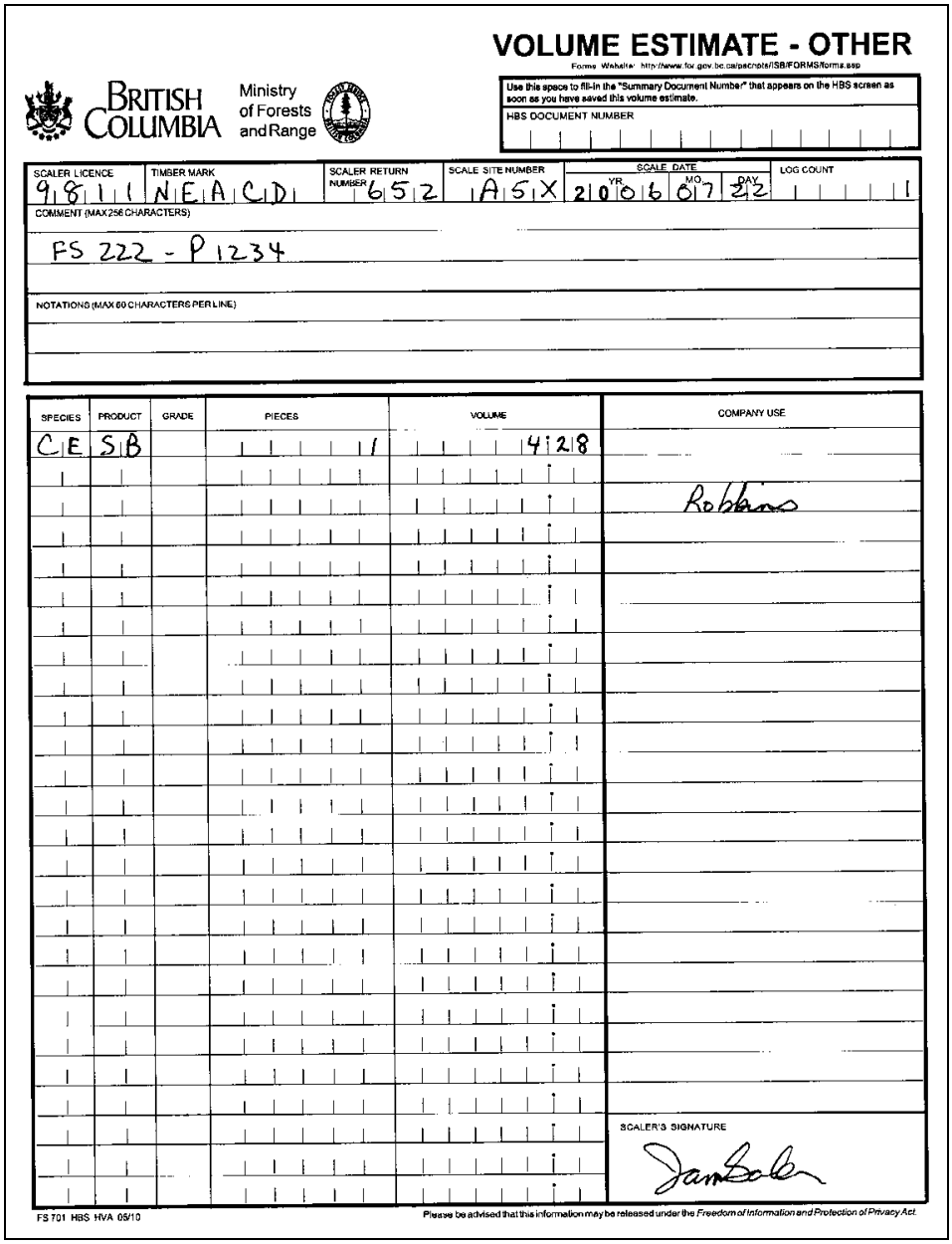

VOLUME ESTIMATE - OTHER

Forms Website: http://www.for.gov.bc.ca/pscripts/ISB/FORMS/forms.asp

BRITISH COLUMBIA Ministry of Forests and Range

Use this space to fill-in the "Summary Document Number" that appears on the HBS screen as soon as you have saved this volume estimate.

HBS DOCUMENT NUMBER

SCALER LICENCE	TIMBER MARK	SCALER RETURN NUMBER	SCALE SITE NUMBER	SCALE DATE YR MO DAY	LOG COUNT
9811	NEACID	652	A5X	2006 07 22	1

COMMENT (MAX 256 CHARACTERS)

FS 222 - P1234

NOTATIONS (MAX 60 CHARACTERS PER LINE)

SPECIES	PRODUCT	GRADE	PIECES	VOLUME	COMPANY USE
CE	SB		1	4128	
					Robbins

SCALER'S SIGNATURE

Dan Scaler

FS 701 HBS HVA 05/10

Please be advised that this information may be released under the *Freedom of Information and Protection of Privacy Act*.

Figure 11.10 FS 701 – Volume Estimate - Other.

11.3 Administrative Documents

Other documentation is required to ensure controlled timber transport and a complete and accurate scale. As scaling and timber transport occur under a diversity of operating conditions, documentation requirements may vary to reflect these conditions.

Load Destination Notice (FS 1146)

Load destination notices are similar to the Load description slip, but are large pieces of sturdy paper that are physically attached to the load. They provide a forest officer with clearly visual description of the timber being transported and location where it is being transported. This may enable the forest officer to monitor timber movement without having to stop the vehicle in transport. It is often used for timber crossing district or regional boundaries. These documents are included in this manual to reflect the type of administrative documentation which may be required through the scaler and/or scale site authorization - or other directive. Please ensure you are familiar with the specific requirements as set by the ministry.

Scaler's Raft Tags (FS 308)

Raft tags are tags attached to the parcel by the scaler, to show the parcel has been scaled. The tag provides the parcel number,

a. scaler number,

b. timber mark,

c. piece count, and

d. scaler return number.

This form is shown below:

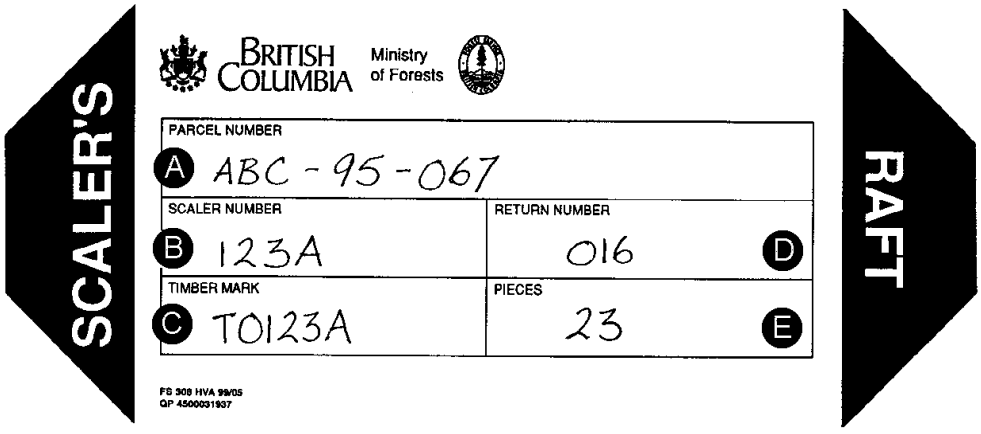

Scalers Diary or Scaler Site Diaries

Scaler diaries are documents that list all the timber that a scaler has scaled for a specified time period. It includes details such as timber marks, piece counts, load numbers, and is signed by the scaler upon completion. The diaries are used to ensure the ministry receives all the scale returns completed by the scaler. Although very useful, scaler diaries are currently being phased out. Please check with the applicable district office for documentation requirements.

Scale Site Arrival and Departure Ledgers (FS 523 and FS 524)

Site ledgers are documents that record every parcel or load of timber that is received at, or transported from a scale site. It lists the load number, the timber mark, scaling information, and must be signed by the scale site operator. An example of Arrival and Departure ledgers are shown below. Detailed instructions for their use are printed on the reverse side of each sheet.

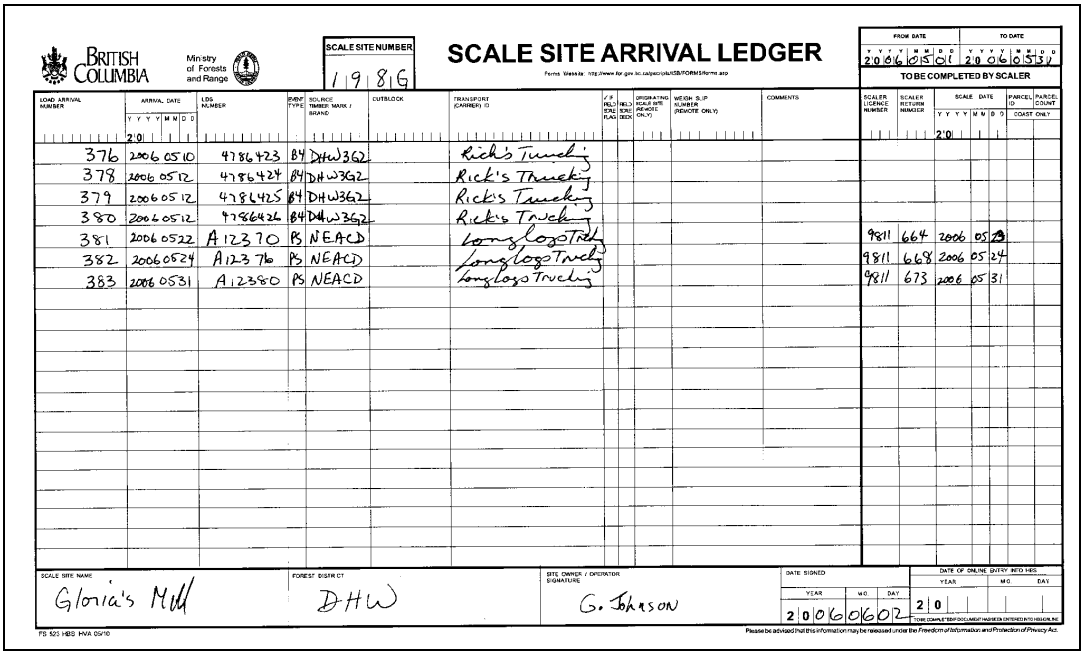

BRITISH COLUMBIA — Ministry of Forests and Range

SCALE SITE NUMBER: 198G

SCALE SITE ARRIVAL LEDGER

Forms Website: http://www.for.gov.bc.ca/pscripts/SB/FORMS/forms.asp

FROM DATE: 2006 05 01 — TO DATE: 2006 05 31

TO BE COMPLETED BY SCALER

LOAD ARRIVAL NUMBER	ARRIVAL DATE (Y Y Y Y M M D D)	LDS NUMBER	EVENT TYPE	SOURCE TIMBER MARK / BRAND	CUTBLOCK	TRANSPORT (CARRIER) ID	✓ IF HELD TO RE-SCALE FLAG	HELD TO RE-SCALE DECK	ORIGINATING SCALE SITE (REMOTE ONLY)	WEIGH SLIP NUMBER (REMOTE ONLY)	COMMENTS	SCALER LICENCE NUMBER	SCALER RETURN NUMBER	SCALE DATE (Y Y Y Y M M D D)	PARCEL ID	PARCEL COUNT
376	2006 05 10	4786423	B4	DHW3G2		Rick's Trucking										
378	2006 05 12	4786424	B4	DHW3G2		Rick's Trucking										
379	2006 05 12	4786425	B4	DHW3G2		Rick's Trucking										
380	2006 05 12	4786426	B4	DHW3G2		Rick's Trucking										
381	2006 05 22	A12370	PS	NEACD		Long Logs Trucking						9811	664	2006 05 23		
382	2006 05 24	A12376	PS	NEACD		Long Logs Trucking						9811	668	2006 05 24		
383	2006 05 31	A12380	PS	NEACD		Long Logs Trucking						9811	673	2006 05 31		

SCALE SITE NAME: Gloria's Mill — FOREST DISTRICT: DHW — SITE OWNER / OPERATOR SIGNATURE: G. Johnson — DATE SIGNED: 2006 06 02 — DATE OF ONLINE ENTRY INTO HBS: 20

FS 523 HBS HVA 05/10

Please be advised that this information may be released under the Freedom of Information and Protection of Privacy Act.

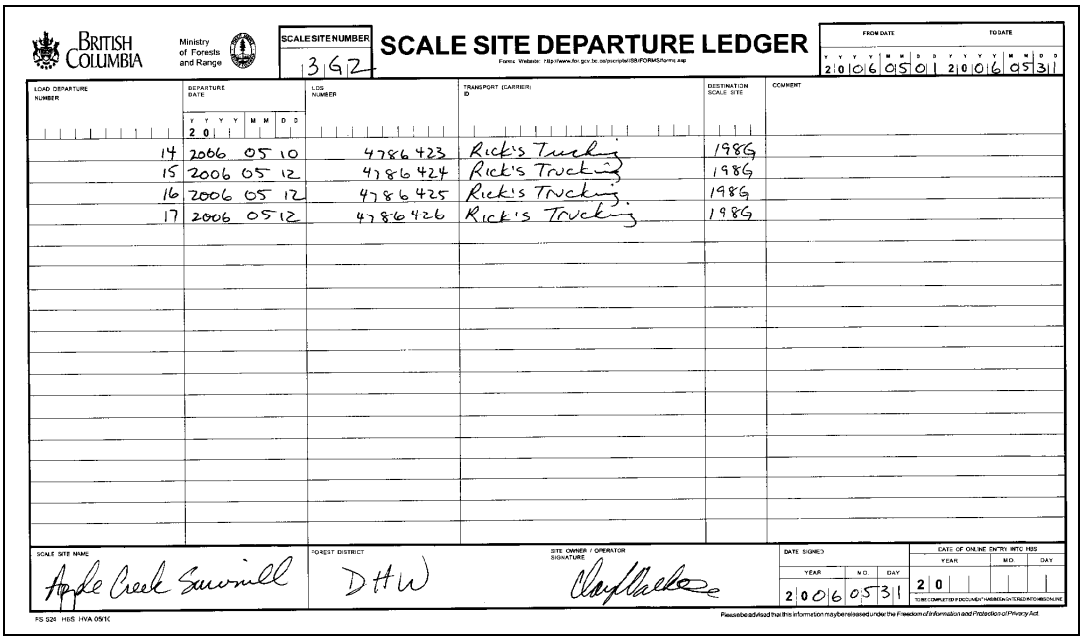

BRITISH COLUMBIA — Ministry of Forests and Range

SCALE SITE NUMBER: 3G2

SCALE SITE DEPARTURE LEDGER

Forms Website: http://www.for.gov.bc.ca/pscripts/SB/FORMS/forms.asp

FROM DATE: 2006 05 01 — TO DATE: 2006 05 31

LOAD DEPARTURE NUMBER	DEPARTURE DATE (Y Y Y Y M M D D)	LDS NUMBER	TRANSPORT (CARRIER) ID	DESTINATION SCALE SITE	COMMENT
14	2006 05 10	4786423	Rick's Trucking	198G	
15	2006 05 12	4786424	Rick's Trucking	198G	
16	2006 05 12	4786425	Rick's Trucking	198G	
17	2006 05 12	4786426	Rick's Trucking	198G	

SCALE SITE NAME: Apple Creek Sawmill — FOREST DISTRICT: DHW — SITE OWNER / OPERATOR SIGNATURE: [signature] — DATE SIGNED: 2006 05 31 — DATE OF ONLINE ENTRY INTO HBS: 20

FS 524 HBS HVA 05/10

Please be advised that this information may be released under the Freedom of Information and Protection of Privacy Act.

Figure 11.11 Site Arrival and Departure Ledgers.

Load Description Slips (FS 649)

Load description slips are documents that accompany timber in transport from the cut block or initial load out area to the place of scale, and provides a description of timber being transported, its origin, and its destination. It can also be used for scaled timber, in which case it must identify the place where the timber was scaled. A forest officer can use this to monitor the movement of timber while in transport. The ministry may require the use of load description slips to accompany scaled or unscaled timber in transport as part of the scale site authorization. Alternate industry load slips may be approved by the ministry provided they contain all the necessary information.

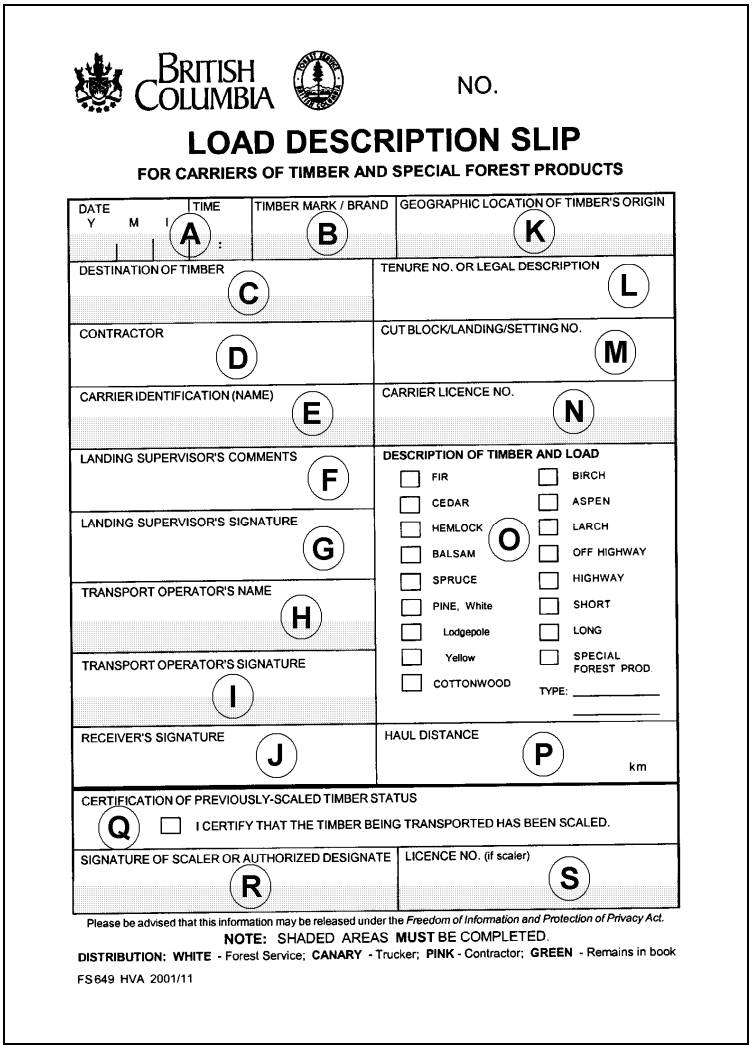

BRITISH COLUMBIA NO.

LOAD DESCRIPTION SLIP

FOR CARRIERS OF TIMBER AND SPECIAL FOREST PRODUCTS

DATE Y M I / TIME A :	TIMBER MARK / BRAND B	GEOGRAPHIC LOCATION OF TIMBER'S ORIGIN K
DESTINATION OF TIMBER C	TENURE NO. OR LEGAL DESCRIPTION L	
CONTRACTOR D	CUT BLOCK/LANDING/SETTING NO. M	
CARRIER IDENTIFICATION (NAME) E	CARRIER LICENCE NO. N	
LANDING SUPERVISOR'S COMMENTS F	DESCRIPTION OF TIMBER AND LOAD O	
LANDING SUPERVISOR'S SIGNATURE G		
TRANSPORT OPERATOR'S NAME H		
TRANSPORT OPERATOR'S SIGNATURE I		
RECEIVER'S SIGNATURE J	HAUL DISTANCE P km	

☐ FIR ☐ BIRCH
☐ CEDAR ☐ ASPEN
☐ HEMLOCK ☐ LARCH
☐ BALSAM ☐ OFF HIGHWAY
☐ SPRUCE ☐ HIGHWAY
☐ PINE, White ☐ SHORT
☐ Lodgepole ☐ LONG
☐ Yellow ☐ SPECIAL FOREST PROD.
☐ COTTONWOOD TYPE: _____

CERTIFICATION OF PREVIOUSLY-SCALED TIMBER STATUS Q ☐ I CERTIFY THAT THE TIMBER BEING TRANSPORTED HAS BEEN SCALED.

SIGNATURE OF SCALER OR AUTHORIZED DESIGNATE R	LICENCE NO. (if scaler) S

Please be advised that this information may be released under the *Freedom of Information and Protection of Privacy Act.*

NOTE: SHADED AREAS **MUST** BE COMPLETED.

DISTRIBUTION: WHITE - Forest Service; **CANARY** - Trucker; **PINK** - Contractor; **GREEN** - Remains in book

FS649 HVA 2001/11

Figure 11.12 FS 649 – Load Description Slip.

Instructions for completion of the FS 649:

Position	Field Name	Description
A	Date	Enter the date and time the timber is being transported from the cutblock.
B	Timber Mark	Enter the timber mark that is applied to the timber.
C	Destination	Enter the scale site where the timber is being transported for scaling.
D	Contractor	Enter the contractor's name (not monitory).
E	Carrier Identification	Enter the truck driver's name.
F	Landing Supervisors Comments	Not mandatory.
G	Landing Supervisors Signature	Landing supervisor's signature must be obtained prior to departure (not monitory).
H	Transport Operator's Name	Name of driver.
I	Transport Operator's Signature	Must be obtained before delivery of the timber.
J	Receiver's Signature	Must be obtained at the time of delivery to the scale site or mill (not monitory).
K	Geographic Location of Timber's Origin	Enter the location name.
L	Tenure No. or Legal Description	Enter where applicable.
M	Cut Block/Landing/Setting No.	Enter where applicable.
N	Carrier Licence No.	Enter the appropriate licence number.
O	Description of Timber and Load	Check the appropriate species box, and special forest products if applicable. If the special forest products box is marked, enter the product code(s) on the 'type' lines listed below the box.
P	Haul Distance	The distance in km from cutblock to scale site.
Q	Certification of Previously-scaled Timber Status	Check this box if the timber has been scaled. Proof of scale may be required by a forest officer.
R	Signature of Scaler or Authorized Designate	Signature of scaler.
S	Licence No.	Enter the Scaler's Licence Number.

11.4 Timing Requirements for Submitting Scale Data

To ensure the needs of the various scale data users are served, it is important that scale data is submitted and processed on a timely basis. Scale data submission requirements must be clearly defined under the scale site authorization. See the *Scaling Administration* chapter of this manual for a discussion of scale site authorization.

Under the *Forest Act*, the owner of the scale site, the operator of the scale site and the scaler are all responsible for ensuring the scale details are recorded in the approved form or electronically, and the scale return is completed and submitted within the time prescribed in the scale site authorization. Other requirements may be set where conditions warrant them.

The following data submission guidelines for inclusion in the scale site authorization are in place.

11.4.1 Weight Scale Site

Accurately completed Weight Slip and Log Tally data shall be transmitted daily to the Ministry of Forests and Range. Pursuant to section 18 of the *Electronic Transactions Act*, scale returns shall be received by the Harvest Billing System no later than six (6) calendar days after the date of scale.

11.4.2 Piece Scale Site

For the purposes of section 97(1) of the *Forest Act* and section 11 of the *Scaling Regulation*, accurately completed scale details and returns shall be delivered within the periods outlined below:

a. Scale Returns

   i. If the submission method is on original paper forms, deliver scale returns to the Ministry of Forests and Range no later than six (6) calendar days after the end of the month in which the timber was scaled.

   ii. If the submission method is by electronic file transfer, transmit the scale returns daily to the Ministry of Forests and Range. Pursuant to section 18 of the Electronic Transactions Act, scale returns shall be received by the Harvest Billing System no later than six (6) calendar days after the date of scale. No paper submission is required, however a back-up document shall be retained for two (2) years in paper or electronic format.

   iii. If the submission method is by online data entry, enter the data online into the Harvest Billing System. Pursuant to section 18 of the *Electronic Transactions Act*, scale returns shall be received by the Harvest Billing System no later than six (6) calendar days after the date of scale. Submit the original paper form at month's end to the Ministry of Forests and Range Regional office.

To assess compliance with these requirements, all scale returns are date stamped by the ministry upon receipt.

11.4.3 Penalties for Late Submission of Scale Returns

When a scale return is not received by the ministry by the due date specified in the scale site authorization penalties may be assessed.

When penalties are assessed, the amount of the penalty is determined as follows:

a. If no stumpage is payable, $25.00.

b. If stumpage is payable, and

   i. the scale return is delivered fewer than 31 days after the due date, $25.00, or

   ii. the scale return is delivered more than 30 days after the due date but fewer than 61 days after the due date, $50.00, or

   iii. the scale return is not delivered 61 days after the due date, $100.00 plus $2.00 for each day following the 61 days that the scale return is not delivered to a maximum of $200.00.

c. If the scale return is based on the method of scaling timber described in section 5(1) of this regulation, $100.00.

See *Scaling Regulation*, *Section 11* for more details.

> To assess a penalty for late submission of scale data, the *Scaling Regulation* requires the scale site authorization to define when scale returns are to be received by the ministry.

11.4.4 Electronic Submission of Scale Results

The Regional Executive Director may order the scale site owner or operator to enter into arrangements to submit scale returns to the ministry electronically under the authority of the *Forest Act*, where:

- the Regional Executive Director estimates the annual volume of timber scaled at a scale site will exceed 500 cubic metres per year, and

The reasons for using electronic data submission include:

- greater accuracy in scale returns, as errors in scale data processing are reduced,
- streamlining administrative effort in processing scale data, and
- significantly improved audit control.

11.5 Scale Data Computation and Documentation Standards and Controls

1. The completeness, accuracy and security of scale data is the responsibility of all parties who collect, process, or submit scale data.
2. All parties collecting, processing or submitting scale data must have an adequate system of internal controls, including scale data controls, processing conventions and administrative processes to ensure all scale data is complete, accurate and secure.
3. The Ministry of Forests and Range will conduct checks and audits to assess the accuracy and completeness of scale data and the adequacy of controls.

To ensure that scale data is consistent and reliable for all users, it must be captured, compiled, and reported in accordance with set standards. Where the ministry considers controls to be deficient it may deny parties from processing and submitting data. These standards are set by the Ministry of Forests and Range and are available from Revenue Branch.

The ministry may set other standards regulating the submission, computation, control, and documentation of scale data. All persons processing scale data must ensure they are conversant with ministry requirements and ensure their standards are current.

In addition to setting scale computation and documentation standards and controls, the Ministry is responsible for ensuring they are complied with. This responsibility is met through two activities:

- approving all applications to process scale data, and
- assessing compliance with standards and controls.

11.5.1 Compliance Checking

District, regional, and headquarters staff are jointly responsible for assessing and ensuring compliance with ministry scale computation and documentation requirements.

The standards, conditions, and approval of the electronic submission of scale data will be set by Revenue Branch.

Related activities include:

- on-site inspections,
- routine checking of tallies and computed reports,
- periodic rekeying of data,
- routine checking of summaries of scale reports used for billing input,
- periodic audits of computed submissions, including:
    - verifying that the parties submitting the data have the necessary approvals in place,
    - verifying receipt of all tallies (log listings from handhelds) for the submission or package,
    - verifying receipt of all supporting documentation as specified in the approval to compile data,
    - verifying that documentation is complete, is in the correct format, signatures are in place, and there are no omissions,
    - rekeying of raw data to ensure key entry, calculations, and roll up of segregations are correct,
    - notifying parties submitting data of unacceptable submissions or errors, and
    - follow-up checking to ensure deficiencies have been remedied.

11.6 Correction of Errors

All scale returns submitted to the ministry may be subject to scrutiny for completeness and accuracy prior to further processing. Where errors or omissions are detected they must be corrected.

The following conventions apply to all errors:

- to facilitate timely processing, obvious errors will be corrected by the ministry, and
- a copy of the corrected paper return will be returned to the originator.

The correcting of errors on scale returns is detailed in the following link to the HBS Guide – Chapter 11 - Correcting Errors:

HBS Industry Reference Guide

11.6.1 Key Punch/coding Errors

The following conventions apply:

- to enable timely processing, obvious errors will be corrected by the ministry, and
- a copy of corrected paper returns will be returned to the originator.

11.6.2 Measurement/Grade Errors and Missing Dimensions

The scaler should be contacted directly if feasible. If in agreement the scaler should consent to changes by initialling all changes.

If the scaler is not in agreement with the changes, changes will not be made unless the return cannot be processed, in which case ministry staff will use their best judgement. A copy of the corrected returns will be returned to the originator.

Where the scaler cannot be contacted, either verbally or in writing, and no response is received in seven (7) days, the return will be processed by ministry staff using their best judgement.

In the case of weight scale samples, missing dimensions will result in cancellation of the sample unless the missing dimension can be completed and there is little doubt about its accuracy.

11.7 Data Loss

While computer technology greatly enhances the collection, computation, and reporting of scale data, there is an ever present risk that data may be lost through hardware/software failure or user error. It is essential that provisions are always in place to:

- minimize the impact of data loss, and
- reconstruct data where they are deemed lost.

11.7.1 Conventions to Minimize Data Loss

Several computer software and operating conventions should be routine to prevent data loss and minimize loss where it does occur:

- always ensure staff are adequately trained and staff are conversant with procedures to follow in the event of an equipment failure,
- always ensure a person is named and available to support any system whether mechanical or manual,
- always backup data to a host computer or other backup device as often as feasible,
- always make hard copies of handheld data as often as feasible and preferably after each load scaled,
- always keep hand-written reports and printouts organized and stored in a safe place where they won't get lost (store copies off-site where feasible),
- always store disks in a safe, dry, dust free place, and avoid temperature extremes (keep away from heaters and magnetic fields),
- always use a reliable power source,
- always ensure backup tapes, disks, disk drives, and other devices are covered in dusty conditions, and
- always ensure any system compiling scale data makes provision for backing up and recovering data to and from an external backup device (e.g., tape backup unit, or floppy disk).

If data loss is detected or suspected:

- contact the system support person for instruction, and
- contact the district scaling supervisor.

11.7.2 Reconstructing Data Which is Lost

Where data are known to be lost, it is essential that:

- the data loss be reported to the district office, and
- the lost data be estimated from previous data as instructed by the district office and submitted to the Forest Service for processing.

The following guidelines are in place:

1. Weight Scale Data:

   - Weight Scale Breakdown.

     The *Weight Scale System* chapter of this manual lays out the procedures to be followed in the event of a weight scale breakdown.

   - Loss of Sample Scale Data.

     Because weight scale samples are used to estimate volumes for the entire population it is essential that they are accurate. If any data loss is detected, the sample may be cancelled on instruction from Regional staff. Similarly, weight scale samples that contain missing dimension data would usually be cancelled unless the missing dimension(s) can be reconstructed with no doubt about their accuracy.

2. Piece Scale Data:

   Under piece scaling the log-by-log scale details are the basis for billing. Any loss of piece scale data represents a potential revenue loss. As such, it is essential that where losses of this kind are detected they must be estimated and the estimate used as the basis for billing.

   Most piece scale production is scaled in the form of truckloads spread on the ground with all logs on each truck bearing the same timber mark. To reconstruct lost data, you must use the data from scaling immediately prior to the breakdown to estimate the volumes by species and grade for each missing truckload as follows:

   - for each timber mark, determine the five most recently scale loads ensuring the truck size and timber mix are representative,
   - based on the five loads, calculate average volumes for each species and grade combination, and
   - for reporting purposes, ensure any estimated loads are noted with the notation "estimated volume" and include your background calculations identifying which load numbers were used for averaging.

Where data is lost during a boom scale or other scaling arrangements where truckload identities are not maintained, it may be essential to reconstruct lost data using approaches other than truckload averages. Such approaches may include using piece counts.

In all cases, data must be reconstructed using the best and most representative data available from previously scaled timber. Timber scaled after the data loss may be used where there is inadequate data available prior to the loss.

11.8 Access to Scale Data

The release of information such as scale data falls under the *Freedom of Information and Protection of Privacy Act*. The following guidelines apply to the release of scale data:

Release of Check Scale Data

1. Upon completion of a check scale, the check scale comparison reports and detailed log listing will always be provided to the scaler who performed the scale.

2. Check scale comparison reports and detailed log listings are available to other parties upon request, subject to provisions of the *Freedom of Information and Protection of Privacy Act*.

11.9 Invoices and Volume Statements

Information on Invoices and Statements can be directed to:

Coast Forest Region	http://www.for.gov.bc.ca/rco/ 2100 Labieux Road Nanaimo, BC V9T 6E9 Phone: 250-751-7001
Northern Interior Forest Region	http://www.for.gov.bc.ca/rni/ 5th Floor, 1011 Fourth Ave, Prince George, BC V2L 3H9 Phone: 250-565-6100
Southern Interior Forest Region	http://www.for.gov.bc.ca/rsi/ 515 Columbia St. Kamloops. BC V2C 2T7 Phone: 250-828-4131

This page is intentionally left blank.

Special Forest Products 12

12.1 Special Forest Products

Some scaling involves the measurement of partially or fully manufactured products instead of raw logs. These products are known as Special Forest Products. This chapter documents the classification and scaling requirements for these products. Topics covered include:

- when can timber be scaled as a special forest products instead of a log,
- exportability of partially manufactured products,
- product descriptions for each product including botanical forest products,
- timber marking requirements, and
- scaling methods and documentation requirements.

12.2 Definition of Special Forest Products

In some cases, operators are permitted to partially or fully manufacture products before having timber scaled. Such products are known as Special Forest Products.

Special Forest Products are designated in the Special Forest Products Regulation to include:

Christmas trees	Cants
Firewood	Posts and rails (split and round)
Mining timbers	Shake and shingle bolts, blocks and blanks
Stakes and sticks	Shakes
Woodchips	Hogged Tree Material

The *Special Forest Product Regulation* can be found at:

http://www.for.gov.bc.ca/tasb/legsregs/forest/faregs/sfprod/sfp.htm

12.2.1 Classification as Special Forest Products

The *Forest Act* requires that timber must be scaled prior to manufacture into any product other than Special Forest Products manufactured on the harvest site. The Special Forest Product may then be scaled instead of the timber.

To be classified as a Special Forest Product, the product:

- must be manufactured on the harvest site;
- the product must conform to the product description; and
- the product must be contemplated (named) in the harvesting authority (for Crown timber).

Timber that does not conform to these requirements must be scaled in log form using the B.C. Metric Scale and graded using the appropriate grade schedule (described in the *Timber Grading* chapters) prior to any manufacturing.

12.2.2 Exporting Special Forest Products

While special forest products, by definition, are partially or fully manufactured, they still may not be considered manufactured for the purpose of export.

> If scalers are asked to classify any material for the purpose of export, they must be familiar with the current export policy set by the Ministry of Forests and Range. Contact either the district or regional office for copies of the policy and clarification.

12.3 General Requirements

12.3.1 Scaling

All special forest products removed from Crown or private land are required to be scaled and recorded in a proper manner by an authorized scaler (see the Scaling Administration chapter for more information on scaling authorizations). Scaling may be performed at the harvest site or at another authorized scale site. If the product is transported off the harvest site prior to being manufactured into a special forest product, that is in log form, it must be scaled in log form and graded accordingly.

The underlying objective of special forest product measurement is to determine the net firmwood volume of the products. A notable exception is Christmas trees, which require a piece count by species and length category. Special forest products are not graded like other forms of timber.

Because of the size, shape, and often the number of pieces conventional piece scaling for special forest products is often not feasible. A number of other methods are in place to determine reliable volumes without the practical problems of scaling each piece. These include:

- the Piece Sampling method (applied mainly to round products),
- the Stacked method (applied mainly to split products),
- the Piece Count (used only for Christmas trees), and
- Weight Scaling or Volumetric Estimate method (applied mainly to woodchips and hogged tree material).

Each method is described in Section 12.6.

The recommended method(s) are given in the section that describes each product. In consultation with the operator and scaler, the Forest Service will authorize the use of a method which is considered accurate and practical for the site. Once a method is determined, it must be applied consistently, and may not be changed without a change to the site and scaler authorizations.

12.3.2 Recording the Scale

Recording the scale is a three step process:

- the scale results are recorded to a scaler's tally sheet,
- the tallies are summarized to a scale summary, and
- the documents are submitted to the ministry (see the Documenting and Reporting Scale chapter for detailed information on forms completion and submission).

12.4 Special Forest Product Descriptions

To scale Special Forest Products, a scaler must be able to identify and code the products, know how to calculate the volume of the product in cubic metres, and be able to document the scale so that charges may be calculated.

The Forest Service will approve the classification and scaling method of a special forest product when issuing a cutting authority, based on the following product descriptions and applications.

12.4.1 Christmas Trees

Product Code: XM

Description: In British Columbia, most Christmas trees are Douglas-fir. Trees are selected for appearance, density, form vigour, taper, balance, foliage condition, cleanliness, freshness and size. The Crown sells Christmas trees by the piece with charges dependent on the height of the tree. The height is to be measured from end to end.

Dimensions: Three height categories are recognized and segregated as grades, these are:

Height Category	
Over 5 m	1
3 to 5 m	2
Under 3 m	3

Scale Method(s): Christmas tree piece count method is used in all cases.

12.4.2 Firewood

Product Code: FW

Description: Firewood is manufactured from round or split fuel logs to specific sizes for heating purposes. Firewood is a finished product.

Dimensions: Firewood lengths range from 30 to 60 cm. Although 60 cm is the longest common length, some modern heating systems will take a "cordwood" length up to 1.2 m. Firewood is consumer marketed in diameters up to 20 cm.

Scale Method(s): The Stacked Special Forest Product Method is used for scaling both split and round firewood. Unless specified in a cutting authority, firewood is not be classified as such.

12.4.3 Mining Timbers

Product Code: MT

Description: Mining timbers are round logs with the bark removed. They are used as support structures in mines. Props and caps are somewhat smaller pieces used in conjunction with the heavier timbers. They are an end product and are not to be classified as mining timbers, props or caps if they will not be used for their described purpose.

Dimensions: The top diameters range from 10 cm to a maximum of 38 cm. Lengths range from 1.4 m to a maximum of 2.4 m.

Scale Method(s): The B.C. Metric Scale is used.

12.4.4 Stakes and Sticks

This section includes a variety of products which were previously assigned separate product codes. The same product code now applies to the entire group of products. The full list of products, previously classified separately, is included below for reference.

Car Stakes

Product Code: SS

Description: Car stakes are round stakes used as side supports on railroad flat cars. They often have one squared end to fit the side pockets built into the car deck and the remainder of the stake has the bark left on. It is now more common to make car stakes from sawn timbers from a mill. These sawn timbers are not classified as car stakes. Car stakes are a finished product and cannot be classified as such with the intent to further process the product into another finished product.

Dimensions: Stakes are approximately 10 to 15 cm in diameter and 3 to 5 m in length. The diameter at any place on a piece must not exceed 15 cm.

Scale Method(s): Either the Piece Sampling method or the Stacked Special Forest Product method may be used.

Grape Stakes

Product Code: SS

Description: Grape stakes are either split or round pieces of any species, with or without bark, and are used to support grape vines. They are also used to support ginseng sun shades. Grape stakes are an end product.

Dimensions: The diameter range is from 7 to 10 cm and may not to exceed 10 cm in diameter at any point. Maximum length is 3.5 m.

Scale Method(s): The Piece Sampling Method is preferred if the stakes are round and well sorted by size categories and the Stacked Method used if the stakes are split and/or the stack is unsorted to size category.

Hop Poles

Product Code: SS

Description: Hop poles are either split or round pieces of any species without bark and are used to support hop vines.

Dimensions: Top diameters range is from 7 cm to a maximum of 13 cm. Length ranges from 4 m to a maximum of 6 m. Hop poles are an end product and are not classified as such if their intended use is for manufacturing another product.

Scale Method(s): As with grape stakes, the piece sampling method is preferred if the poles are round and well sorted by size categories and the stacked method used if the poles are split and/or the stack is unsorted by size. Unless provided for in the cutting authority, hop poles with diameters exceeding 10 cm at any point must be scaled using the B.C. Metric Scale.

Lagging (Split)

Product Code: SS

Description: Split wood of varying thickness, width and length. Lagging is split planking used especially for preventing cave-ins in earthwork or for supporting an arch during construction. As with cribbing, lagging is only manufactured for use as an end product at a specific site for a specified project.

Dimensions: There are no restrictions for thickness, width or length but they cannot be classified as lagging if marketed for projects or uses other than their described use at a specific site.

Scale Method(s): The Stacked Special Forest Product Method is used. No lagging has been scaled in many years because of its limited application.

Orchard Props

Product Code: SS

Description: Orchard props are split or round logs used to support fruit tree branches. Although not necessarily debarked, they are an end product and may not be used for a purpose other than their described purpose.

Dimensions: The top diameters range from 7 cm to a maximum of 10 cm. The lengths can reach a maximum of 2.5 m.

Scale Method(s): The Piece Sampling Method is preferred if the pieces are round and well sorted into size classes, and the Stacked Method is used if the pieces are split and/or not sorted into size classes.

Pickets and Palings

Product Code: SS

Description: Pickets and palings are split, bark free boards and stakes (usually red cedar), used in fence construction. All four faces are usually split, although the edges may be sawn. The faces are never sawn. They are typically rounded or pointed on the top and are considered to be a finished product. They may not be classified as a picket or paling if intended for another purpose or for further manufacturing.

Dimensions: Thicknesses range from 1 to 2.5 cm and widths range from 7 to 13 cm. Picket lengths range up to 1.2 m but palings tend to be longer, as in a stockade type fence, up to 2.5 m.

Scale Method(s): The Stacked Special Forest Product Method is preferred as pickets and palings are split products.

Stakes and Stocks (Sticks)

Product Code: SS

Description: Stakes and stocks can be any product with or without bark and a large end diameter of less than 10 cm. Typical products are tepee poles, bulldoze sticks, spears, movie props and other special purpose products that are not defined elsewhere in this manual.

Dimensions: The large end diameter of the product must be less than 10 cm. There are no restrictions on length.

Scale Method(s): Any of the scaling methods may be chosen, including the B. C. Metric Scale method, the Piece Sampling Method or the Stacked Method, depending on practicality. A Forest Service scaling representative will assist the scaler in determining that practicality.

12.4.5 Cants

Product Code: CA

Description: A cant is a partially manufactured product which has two flat faces that are further processed through an edger or resaw to make boards. Waney areas are where the bark or the sapwood surface are still present on the product. Cants are produced from dead and down post-logging residue that, as determined by the regional manager, would not make a sawlog.

Dimensions: There are no restrictions for end dimensions or length because the classification was established to allow improved utilization of waste material left on a harvest site. If scaler's are asked to further classify cants for the export market, they should refer to the current export policy.

Scale Method(s): The piece sampling method or the B.C. Metric Scale method may be used to obtain a volume in cubic metres.

12.4.6 Posts and Rails (Split and Round)

This section also includes a number of products which previously were individually classified as special forest products. The same product code now applies, and the full range of products within the coding is listed for reference.

Fence Posts (Round)

Product Code: PR

Description: Round fence posts are peeled logs (usually lodgepole pine) manufactured to various dimensions for use in the construction of a fence. Modern fence post manufacturing processes include sharpening and chemical treatment against decay. Fence posts are a finished product and are not further processed into another end product, but will not require treatment at the harvest site to qualify.

Dimensions: Posts are graded in sizes to suit consumer markets. Line post top diameters range from 6 to 15 cm and butt diameters range up to 18 cm in these size classes. Corner post top diameters are usually larger than line posts but do not exceed 22 cm. Standard length classes are "sixes" (1.8 m), "six-sixes" (2 m), "sevens" (2.2 m), "eights" (2.4 m), and "tens" (3 m). Posts exceeding these dimensions are an exception, and their consideration as a Special Forest Product is doubtful.

Scale Method(s): Either the piece sampling or the stacked methods may be used depending on practicality. Unless provided for in the cutting authority, piece scale or weight scale as logs using the B.C. Metric Scale described in the Firmwood Scaling Procedures and Timber Grading chapters of this manual.

Fence Rails (Split)

Product Code: PR

Description: Split fence rails are normally manufactured from trees unsuitable for the manufacture of lumber. They have three or four split, debarked faces and serve the same function as round rails. Both ends of rails are often chamfered to fit pockets drilled in split red cedar posts to suit the decorative rail fence market. Split fence rails are a finished product and are not manufactured further.

Dimensions: Each split face ranges from 5 to 10 cm in width at any point depending on the size class. In manufacture, a circumference range is often used to grade rails into sizes corresponding to particular markets. A "Jumbo" rail is about 33 cm around, a "pony" rail is about 25 cm around, and a "Garden" rail is less than 25 cm around. Length classes are the same as for round rails at 1.8, 2, 2.2, 2.4, 3, and 3.6 m.

Scale Method(s): The stacked method is considered the most practical scaling method.

Fence Posts (Split)

Product Code: PR

Description: Split fence posts are normally manufactured from red cedar trees considered unsuitable for the manufacture of lumber. They have three or four split, debarked faces and serve the same function as round posts. Pockets are often drilled for two or three fence rails to suit the decorative rail fence market. Split fence posts are a finished product and are not further manufactured.

Dimensions: Each split face ranges from 8 to 13 cm in width at any point depending on the size class. In manufacture, a circumference range is often used to grade posts into sizes. A "Jumbo" post is approximately 46 cm around, a "Pony" post is about 40 cm and a "Garden" post is less than 40 cm around. Corner post top diameters are usually larger than line posts but do not exceed 15 cm per face or 60 cm around. Length classes are the same as for round posts at 1.8, 2, 2.2, 2.4 and 3 m.

Scale Method(s): The Stacked Special Forest Product Method is the practical scaling method.

Fence Rails (Round)

Product Code: PR

Description: Round fence rails are peeled logs (usually lodgepole pine) manufactured to various dimensions for use in the construction of a fence. Fence rails are used in place of or in addition to wires and boards. Because rails are not exposed to conditions as harsh as posts are, treatment against decay is not as common. Fence rails are a finished product and are not processed further.

Dimensions: Rails are graded to diameter and length classes to suit site conditions or consumer markets. Rail diameters range up to 10 cm measured at any point in the length. Lengths are commonly classed in "sixes" (1.8 m), "eights (2.4 m), "tens" (3 m) and "twelves" (3.6 m).

Scale Method(s): Either the Piece Sampling or the Stacked Methods may be used depending on the practicality. Unless provided for in the cutting authority, dimensions larger than 10 cm are scaled as logs using the B.C. Metric Scale.

12.4.7 Shake and Shingle Bolts, Blocks and Blanks

Product Code: SB

Description: Shake bolts and blocks are usually bark free segments cut from logs or slabs, usually of red cedar but increasingly from other species used for the manufacture of shakes. Although they are commonly marketed at this stage, bolts and blocks are only a "partially manufactured" product, and may not be sold for a use other than their described use. Shake blanks are split from blocks, from which two "taper sawn" shakes are made from each blank.

Dimensions: Shake bolts are cut into lengths of approximately 1.4 or 1.45 m from which shake blocks are cut into the standard lengths of 46 cm (called "eighteens"), and 61 cm (called "twenty fours").

Scale Method(s): Blocks and blanks are typically close piled onto very uniform 1.5 cord pallets for shipping and marketing. It is common practice to use the stacked method of scaling after the blocks are loaded on pallets. An air space factor of 0.7 is used if the blocks are not debarked and a factor of 0.8 is used if they are debarked.

Shingle Bolts and Blocks

Product Code: SB

Description: As with shake bolts and blocks, shingle bolts and blocks are usually debarked segments cut from logs or slabs, usually of red cedar but increasingly from other species, used in the manufacture of shingles. The only difference is that they can be shorter and smaller than shake bolts. Although they are commonly marketed at this stage, bolts and blocks are a partially manufactured product, and may not be sold for another purpose other than their described purpose.

Dimensions: Shingle bolts are cut into lengths of approximately 1.3 and 1.45 m from which Shingle blocks are cut into standard lengths of 41 cm (called "sixteens"), 46 cm (called "eighteens"), and a maximum of 61 cm (called "twenty fours").

Scale Method(s): Because the blocks are typically close piled onto very uniform 1.5 cord pallets for shipping and marketing, it is therefore practical to use the stacked method of scaling after the blocks are palletized, as described for shake bolts and blocks.

12.4.8 Shakes

Product Code: SK

Description: Shakes are split from blocks or are taper sawn from blanks and are usually of red cedar, but increasingly of other species. Shakes are a finished or end product and are marketed as such.

Dimensions: Shakes are variable in width and thickness according to grade but do not usually exceed 2.5 cm in thickness. They are almost always tapered. Lengths are in the standard lengths of 46 cm (called "eighteens") and 61 cm (called "twenty fours").

Scale Method(s): Because shakes are typically close piled onto very uniform 1.5 cord pallets for shipping and marketing, it is practical to use the Stacked method of scaling after the blocks are palletized. If this is the case, it is permissible to count the number of cords and convert to cubic metres by multiplying the number of cords by 3.62457. This provides the enclosed volume in cubic metres. Multiply this volume by a solid wood conversion factor of 0.8 to obtain the solid wood volume in cubic metres. The formula is:

Volume (m3) = cords x 3.62457 x Solid Wood Factor (0.8)

12.4.9 Woodchips

Product Code: CH

Description: A Woodchip is a small, thin portion of wood cut from a larger piece by a mechanically operated knife.

Dimensions: A woodchip shows two knife cuts and its width is always greater than its thickness.

Scale Method(s): Weight Scaling using an established ration and reported by the leading species or use a Volumetric estimate.

12.4.10 Hogged Tree Material

Product Code: HF

Description: Hog Fuel is tree residue or by-products that have been shredded into fragments by mechanical action.

Dimensions: Hogged tree material is grindings from all parts of a tree, including bark, needles and limbs.

Scale Method(s): Weight Scaling using an established ratio and reported by leading species or use a Volumetric estimate.

12.5 General Requirements

12.5.1 Timber Marking

The timber marking requirements for Special Forest Products are the same as for timber. That is, all products must be conspicuously marked on the area of origin prior to any transportation off the area in accordance with the Timber Marking & Transport Regulation. Exemptions to the marking requirements may be granted where practical. Alternate marking methods include:

- on each side of the load of timber, truck or rail car, by using one of the following methods:
  - writing the timber mark in paint or crayon on the timber,
  - attaching a sign displaying the timber mark to the timber, truck or railcar,
  - using another method as directed by a forest officer, and
- if the timber includes logs, by using a hammer indentation on at least 2 log ends at the front and at least 2 log ends at the back of the load of timber.

Exemptions will not be issued if timber will be water-borne, subject to export, or transported out of a jurisdiction unless a different level of marking is approved by the receiving jurisdiction.

12.5.2 Transport Documentation

Anyone transporting timber, Special Forest Products, recognized botanical products, and other forest products is required to carry documentation describing the product being transported. Every load must carry a manifest or bill of lading, which is provided for on the Christmas Tree Return (FS 200), the Record of Purchase of Special Forest Products (FS 222), or the Load Description Slip for products scaled in log form.

The purchaser of timber is responsible for obtaining and retaining documentation on proof of scale for material received at the purchaser's site. The purchaser may be responsible for payment of stumpage and any associated charges where the purchaser cannot prove that the timber was scaled previously.

12.5.3 Document Handling for Special Forest Products

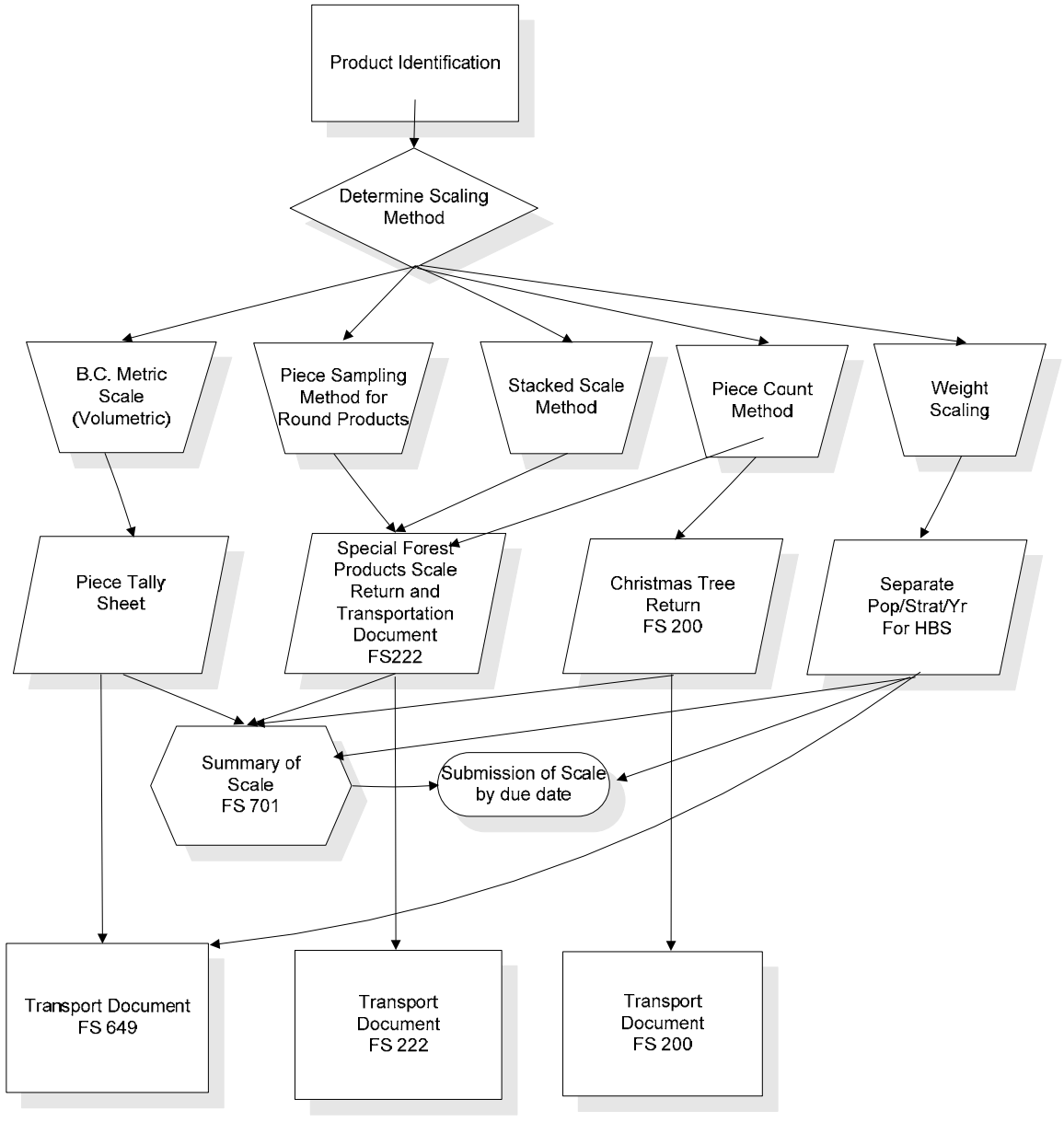

Figure 12.1 Flow Diagram Outlining Selection of Scaling Methods and Forms.

12.6 Special Forest Product Scaling Methods

When choosing a method of scaling Special Forest Products, the scaler (in consultation with a Forest Service scaling representative), must decide on a method to use to suit the product and the site conditions. Although method(s) are recommended in the product descriptions section for each product, it may be more practical to choose another method. Some guidelines are:

The Piece Sampling method is best for:

- uneven piles,
- product lengths exceeding 5 m,
- well sorted size classes,
- large numbers of smaller pieces, and
- round products, for example, round fence posts.

The Stacked method is best for:

- even piles,
- product lengths of 5 m or less,
- difficult to sort size classes,
- large numbers of very small pieces, and
- irregular shapes, for example, shake and shingle blocks.

The Piece Count is used only for Christmas trees.

The B.C. Metric Piece Scale is used for poles, pilings, and building logs, and where:

- material is not piled into units for sampling or stacked methods,
- material is not sorted into size, species and quality class, and
- another scaling method has not been authorized.

Volumetric Estimate or Weight Scale using a predetermined ratio is the best method for woodchips or hogged tree material.

In consultation with the operator and scaler, the Forest Service will authorize the use of a method most accurate and practical for the site. Once a method is determined, it must be applied consistently, and may not be changed without a change to the scale site and scaler authorizations.

12.6.1 Round Piece Sampling Method

This method of determining the net volume of a Special Forest Product is used for scaling round small diameter special forest products such as round fence posts, round rails, grape stakes, orchard props, and sticks. The Weight Scaling Sampling chapter provides a comprehensive overview of sampling techniques used in weight scaling, and the piece sampling process is similar. Section 12.8.1 illustrates a method to determine the number of samples required for a given group or population.

The steps are:

1. Sort the product to be scaled into species, standard length classes (increments of 0.1 m), and top size (increments of one rad class). Normally, most products will be sorted into dimension classes as part of the marketing process. If this sort includes dimensions exceeding the above increments, more samples will have to be taken to achieve an accurate scale.

2. Scale a number of representative pieces using the BC Metric Scale described in the Gross Measurements Procedures chapter. A sufficient quantity of pieces must be scaled to establish an average volume with confidence. For example, if all of the pieces are nearly identical in length and diameter, fewer pieces would be sampled, but as the size variation increases within a pile, more samples are required. In all cases, a minimum number of samples may be set by the ministry.

3. Determine the average net volume per piece or the "volume factor" (to five significant figures) for each bundle or pile by dividing the total volume of the scaled pieces by the piece count of the scaled pieces.

4. Count the number of pieces in the bundle or pile.

5. Multiply the number of pieces in each bundle or pile by the volume factor to determine the net cubic volume of the bundle or pile.

12.6.1.1 Calculation of the Piece Sampling Method

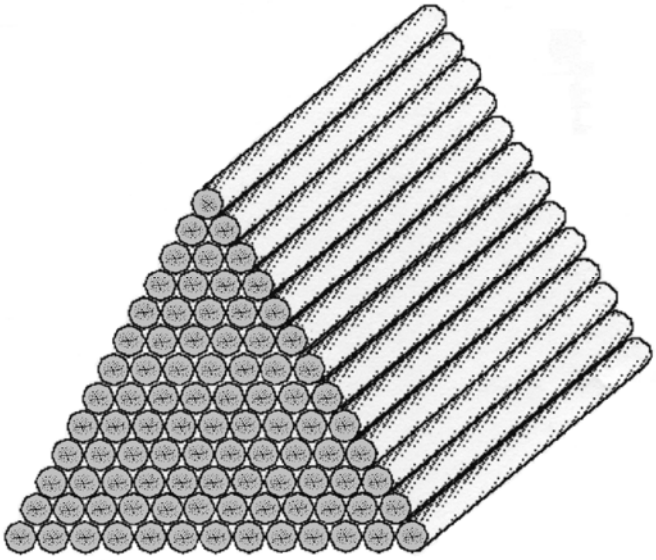

Figure 12.2 A Pile of Posts Sorted to Size Classes and Ready for Sampling. g

In determining the volume for 100 round fence posts 12 cm in diameter and 2.4 m long, five sample posts were measured.

Post Number	Length	Top	Butt	Volume (dm^3)
1	2.4	6	7	14 + 18 = 32
2	2.4	6	6	14 + 14 = 28
3	2.4	6	7	14 + 18 = 32
4	2.4	7	7	18 + 18 = 36
5	2.4	6	6	14 + 14 = 28
Total volume of five posts:				0.156 m^3
Average volume per post (factor):				0.156 m^3 ÷ 5 = 0.0312 m^3
Total volume of 100 posts:				0.0312 x 100 = 3.1 m^3

6. The measurements are recorded on the FS 222 in the following manner (Figure 12.3).

   On the FS 222, clearly indicate the factor used. Refer to Documenting and Reporting Scale for more details on completing this form.

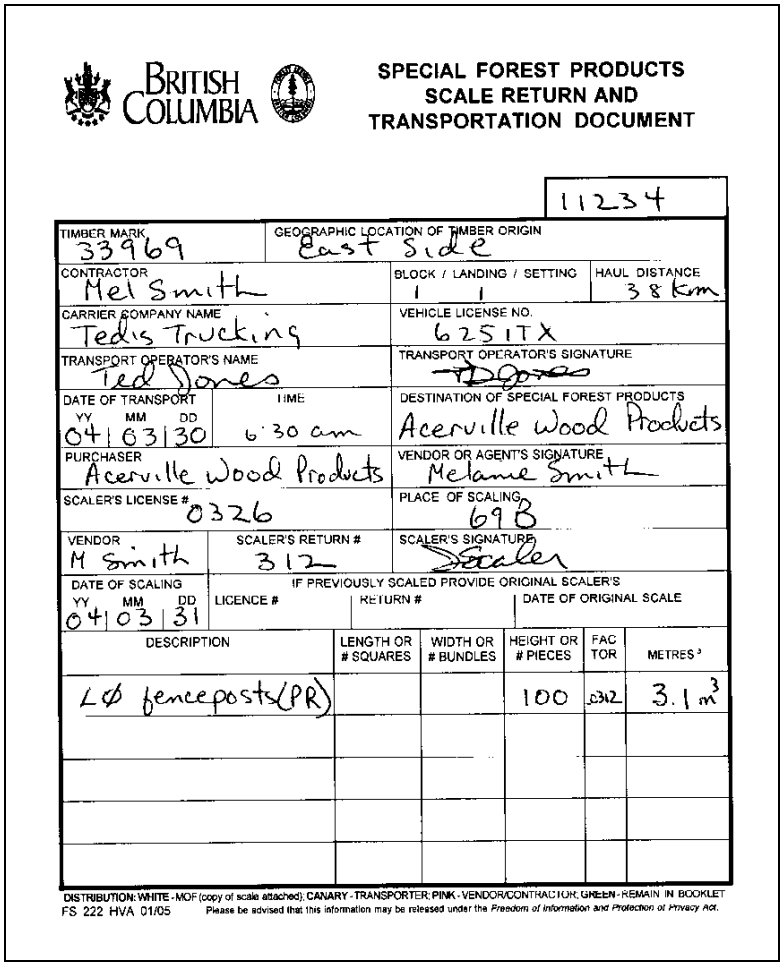

BRITISH COLUMBIA

SPECIAL FOREST PRODUCTS SCALE RETURN AND TRANSPORTATION DOCUMENT

11234

TIMBER MARK: 33969	GEOGRAPHIC LOCATION OF TIMBER ORIGIN: East Side		
CONTRACTOR: Mel Smith		BLOCK / LANDING / SETTING: 1 1	HAUL DISTANCE: 38 km
CARRIER COMPANY NAME: Tedis Trucking		VEHICLE LICENSE NO.: 625 ITX	
TRANSPORT OPERATOR'S NAME: Ted Jones		TRANSPORT OPERATOR'S SIGNATURE: TDJones	
DATE OF TRANSPORT YY MM DD: 04 03 30	TIME: 6:30 am	DESTINATION OF SPECIAL FOREST PRODUCTS: Acerville Wood Products	
PURCHASER: Acerville Wood Products		VENDOR OR AGENT'S SIGNATURE: Melanie Smith	
SCALER'S LICENSE #: 0326		PLACE OF SCALING: 698	
VENDOR: M Smith	SCALER'S RETURN #: 312	SCALER'S SIGNATURE: Scaler	
DATE OF SCALING YY MM DD: 04 03 31	IF PREVIOUSLY SCALED PROVIDE ORIGINAL SCALER'S LICENCE #	RETURN #	DATE OF ORIGINAL SCALE

DESCRIPTION	LENGTH OR # SQUARES	WIDTH OR # BUNDLES	HEIGHT OR # PIECES	FAC TOR	METRES³
L Ø fenceposts (PR)			100	.032	3.1 m³

DISTRIBUTION: WHITE - MOF (copy of scale attached); CANARY - TRANSPORTER; PINK - VENDOR/CONTRACTOR; GREEN - REMAIN IN BOOKLET

FS 222 HVA 01/05 Please be advised that this information may be released under the *Freedom of Information and Protection of Privacy Act*.

Figure 12.3 Completed FS 222 for 100 Round Fence Posts.

7. After scaling, a Volume Estimate - Other (FS 701) is completed and submitted to the appropriate Forest Service district office on or before the prescribed submission time (Figure 12.4).

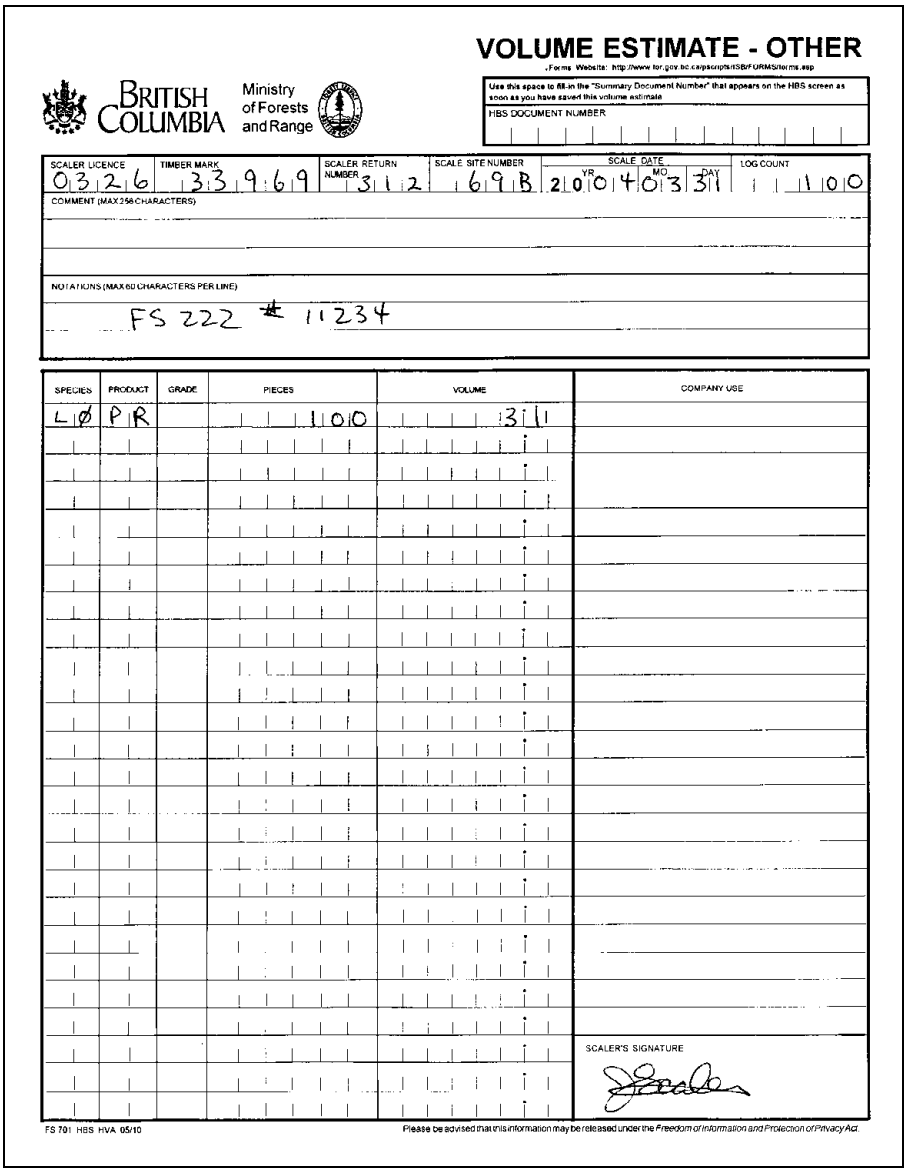

VOLUME ESTIMATE - OTHER

Forms Website: http://www.for.gov.bc.ca/pscripts/ISB/FORMS/forms.asp

BRITISH COLUMBIA Ministry of Forests and Range

Use this space to fill-in the "Summary Document Number" that appears on the HBS screen as soon as you have saved this volume estimate

HBS DOCUMENT NUMBER

SCALER LICENCE	TIMBER MARK	SCALER RETURN NUMBER	SCALE SITE NUMBER	SCALE DATE YR	SCALE DATE MO	SCALE DATE DAY	LOG COUNT
03216	33969	3112	69B	2004	03	31	1010

COMMENT (MAX 256 CHARACTERS)

NOTATIONS (MAX 60 CHARACTERS PER LINE)

FS 222 # 11234

SPECIES	PRODUCT	GRADE	PIECES	VOLUME	COMPANY USE
LØ	PR		1010	311	

SCALER'S SIGNATURE

FS 701 HBS HVA 05/10

Please be advised that this information may be released under the *Freedom of Information and Protection of Privacy Act*.

Figure 12.4 Completed FS 701 – Volume Estimate – Other Summarizing the FS 222 in Figure 12.3.

12.6.2 Stacked Special Forest Products Method

The stacked method of scaling special forest products can be used for either split or round products.

Method

1. Stack the product so all the pieces are of one species and length. The stack should be of uniform length, width, and height.

2. Measure the length, width, and height of the stack to the nearest 0.02 m (2 cm). Refer to Figure 12.5 for the number of height measurements required to establish the average height of the stack.

Table 12-1 Table of Number of Pile Heights Taken for Various Lengths

	Number of Height Measurements	
Pile Length (Metres)	**Regular Stacks**	**Irregular Stacks**
2	2	3
3	2	3
5	3	6
10	6	12
15	8	12
20	10	12
25	10	15

3. Multiply the measured length, width and average height of the stack to obtain the volume of the stack in cubic metres.

4. Multiply the stacked volume by a factor (Table 12.2) to eliminate the volume of bark, air space, and defect in the stack and determine the net volume of the stack. The solid wood conversion factors in the following table have been developed over many years of experience. Although the factors may be accurate in the average manufacturing process, they may not always be appropriate, due to diverging methods, equipment, and/or raw materials. Therefore, the scaler may request a Forest Service officer to authorize a more appropriate solid wood conversion factor.

Table 12-2 Table of Solid Wood Conversion Factors by Product

Product	Solid Wood Conversion Factor
Unpeeled round wood products	0.65
Unpeeled split products	0.70
Peeled round wood products	0.75
Peeled split products	0.80

5. The measurements will be recorded on the FS 222 in the following manner:

   On the FS 222, clearly indicate the factor used.

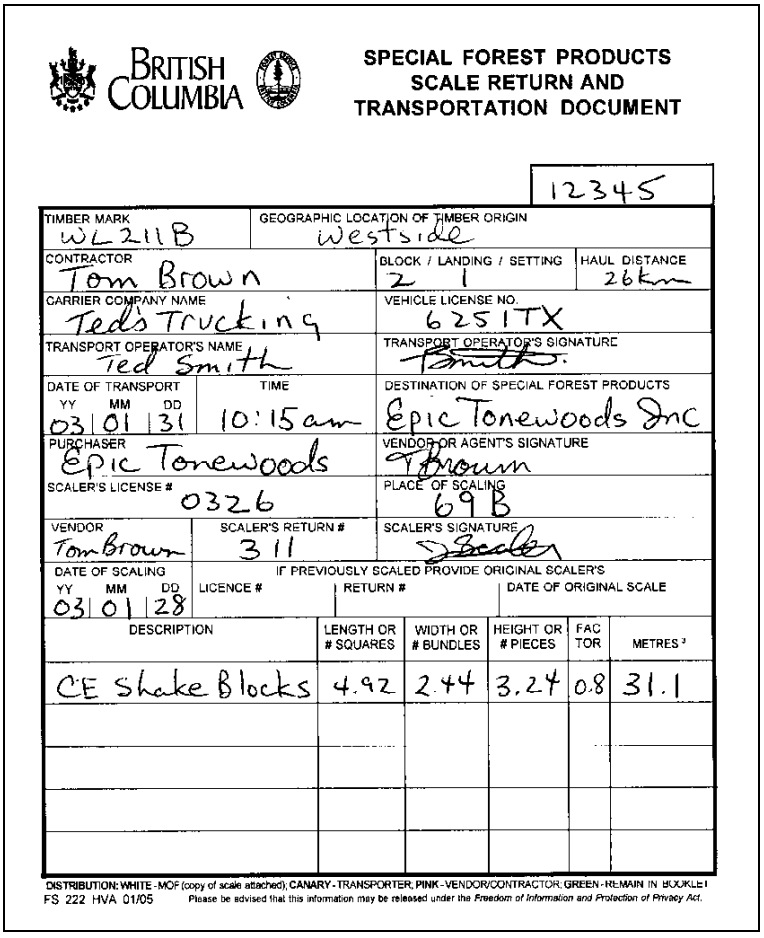

BRITISH COLUMBIA

SPECIAL FOREST PRODUCTS SCALE RETURN AND TRANSPORTATION DOCUMENT

12345

TIMBER MARK: WL211B	GEOGRAPHIC LOCATION OF TIMBER ORIGIN: Westside
CONTRACTOR: Tom Brown	BLOCK / LANDING / SETTING: 2 1 — HAUL DISTANCE: 26km
CARRIER COMPANY NAME: Ted's Trucking	VEHICLE LICENSE NO.: 6251TX
TRANSPORT OPERATOR'S NAME: Ted Smith	TRANSPORT OPERATOR'S SIGNATURE: Smith
DATE OF TRANSPORT YY MM DD: 03 01 31 — TIME: 10:15am	DESTINATION OF SPECIAL FOREST PRODUCTS: Epic Tonewoods Inc
PURCHASER: Epic Tonewoods	VENDOR OR AGENT'S SIGNATURE: T Brown
SCALER'S LICENSE #: 0326	PLACE OF SCALING: 69B
VENDOR: Tom Brown — SCALER'S RETURN #: 311	SCALER'S SIGNATURE: Scaler
DATE OF SCALING YY MM DD: 03 01 28 — IF PREVIOUSLY SCALED PROVIDE ORIGINAL SCALER'S LICENCE # / RETURN # / DATE OF ORIGINAL SCALE	

DESCRIPTION	LENGTH OR # SQUARES	WIDTH OR # BUNDLES	HEIGHT OR # PIECES	FACTOR	METRES³
CE Shake Blocks	4.92	2.44	3.24	0.8	31.1

DISTRIBUTION: WHITE - MOF (copy of scale attached); CANARY - TRANSPORTER; PINK - VENDOR/CONTRACTOR; GREEN - REMAIN IN BOOKLET

FS 222 HVA 01/05 Please be advised that this information may be released under the *Freedom of Information and Protection of Privacy Act*.

Figure 12.5 A Completed FS 222 with Split Product.

6. After scaling, a Volume Estimate – Other (FS 701 – see Figure 12.6) is completed and submitted to the appropriate Forest Service district office on or before the prescribed submission time.

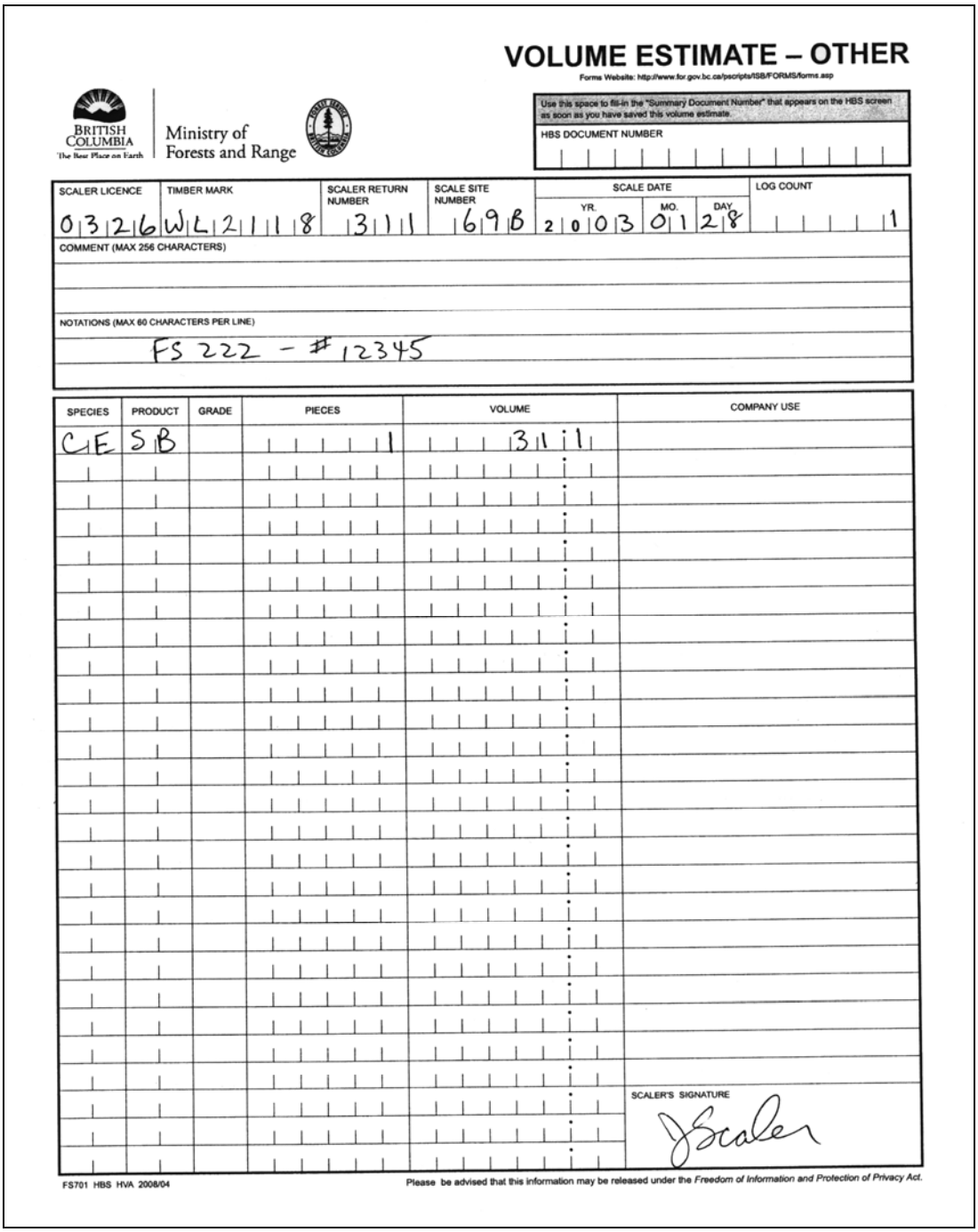

VOLUME ESTIMATE – OTHER

Forms Website: http://www.for.gov.bc.ca/pscripts/ISB/FORMS/forms.asp

BRITISH COLUMBIA The Best Place on Earth | Ministry of Forests and Range

Use this space to fill-in the "Summary Document Number" that appears on the HBS screen as soon as you have saved this volume estimate.

HBS DOCUMENT NUMBER

SCALER LICENCE	TIMBER MARK	SCALER RETURN NUMBER	SCALE SITE NUMBER	SCALE DATE YR.	SCALE DATE MO.	SCALE DATE DAY	LOG COUNT
0216	WL2118	3111	698	2003	01	28	1

COMMENT (MAX 256 CHARACTERS)

NOTATIONS (MAX 60 CHARACTERS PER LINE)

FS 222 - # 12345

SPECIES	PRODUCT	GRADE	PIECES	VOLUME	COMPANY USE
CE	SB		1	311	

SCALER'S SIGNATURE

FS701 HBS HVA 2008/04

Please be advised that this information may be released under the *Freedom of Information and Protection of Privacy Act.*

Figure 12.6 A Completed FS 701 – Volume Estimate – Other – Summarizes the Information from the FS 222 in Figure 12.7.

12.6.3 Christmas Tree Piece Count Method

The Christmas Tree Piece Count method is used for Christmas tree scaling.

Method

1. The Christmas trees are sorted by species and height category. The height categories are:

	Height Category
Over 5 m	1
3 to 5 m	2
Under 3 m	3

2. A piece count is taken for each species and grade.

3. The piece count is recorded on the FS 200, Christmas-Tree Return. The height category (i.e., 1, 2, or 3) is recorded under the grade field on the tally sheet.

4. After scaling, an FS701 – Volume Estimate is completed and submitted to the appropriate Forest Service district office on or before the prescribed submission time (Figure 12.7).

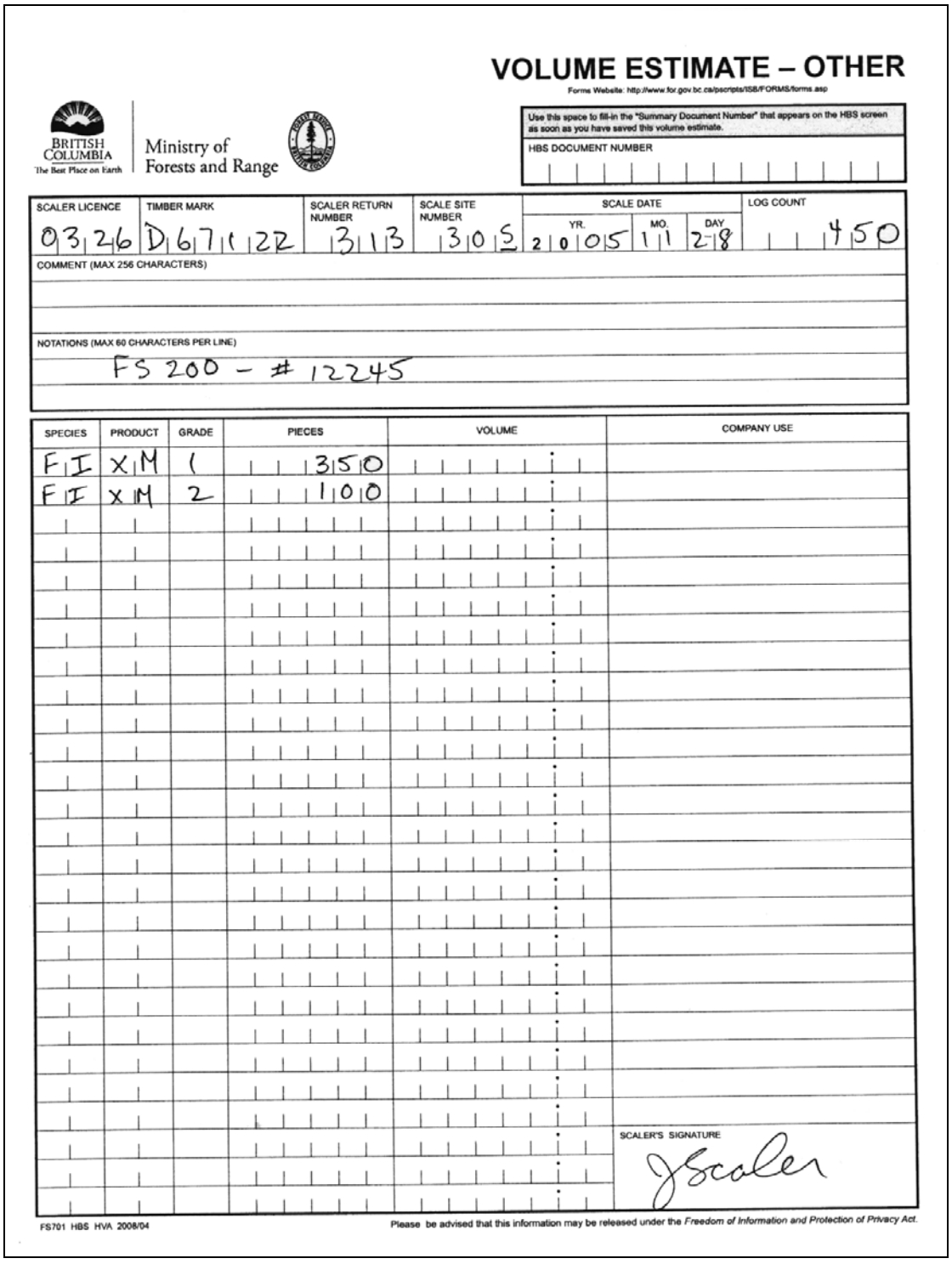

VOLUME ESTIMATE – OTHER

Forms Website: http://www.for.gov.bc.ca/pscripts/ISB/FORMS/forms.asp

BRITISH COLUMBIA The Best Place on Earth | Ministry of Forests and Range

Use this space to fill-in the "Summary Document Number" that appears on the HBS screen as soon as you have saved this volume estimate.

HBS DOCUMENT NUMBER

SCALER LICENCE	TIMBER MARK	SCALER RETURN NUMBER	SCALE SITE NUMBER	SCALE DATE YR.	SCALE DATE MO.	SCALE DATE DAY	LOG COUNT
0326	D67122	313	305	2005	11	28	450

COMMENT (MAX 256 CHARACTERS)

NOTATIONS (MAX 60 CHARACTERS PER LINE)

FS 200 – # 12245

SPECIES	PRODUCT	GRADE	PIECES	VOLUME	COMPANY USE
FI	XM	1	350		
FI	XM	2	100		

SCALER'S SIGNATURE

J Scaler

FS701 HBS HVA 2008/04

Please be advised that this information may be released under the *Freedom of Information and Protection of Privacy Act.*

Figure 12.7 A Completed FS 701 – Volume Estimate – Other Which Summarizes the Information on the FS 200.

12.6.4 Estimating Volumes of Tree Length Piles

Often, a scaler is required to estimate the volume of decks of tree length logs. It is not enough to simply look at a deck and "guesstimate" the volume without some means of measurement to demonstrate confidence that the estimate is based on valid principles. These estimates are used for inventory control, contractor advances, interim invoicing, and the like, but are not adequate for final scale submissions unless pre-authorized by the Regional Manager or District Manager. Piece scaling, weight scaling, and the two Special Forest Products methods (piece sampling and stacked) are the only approved scales for final billing.

Two approaches may be taken, both being a variation of either the round piece sampling method or the stacked method. The level of detail required will influence the scaler's choice of method.

12.6.4.1 Sampling the Pile and Counting Pieces

This method will provide more information on species and grade, but will require enough sampling to develop confidence in the results. If the scaler is concerned with volumes only, then enough samples are taken to represent with confidence the diameter classes and lengths represented. If species and grade considerations are important, then correspondingly more samples must be taken.

1. Determine the number of samples required based on the level of information needed about the pile. Recognized sampling techniques are described in the Weight Scale Sampling chapter, but are more involved than necessary for this estimation process. For a more practical approach, select a sample area representative of the pile by estimation.

2. Scale every piece in the sample area as in Figure 12.8.

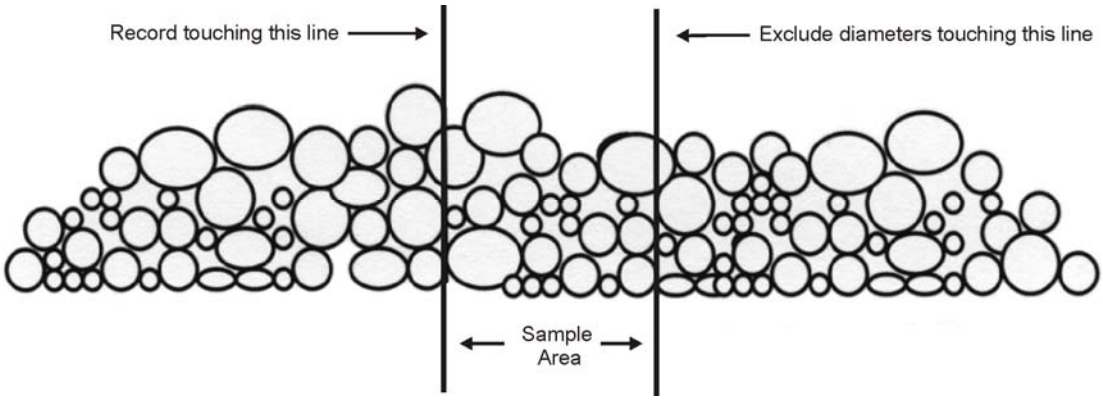

Figure 12.8 Selecting a Sample Section from a Log Deck.

3. Count the number of trees in the pile.

4. The frequency of each class in the sample is applied to the total count to determine the distribution of each class in the pile. For example, a sample area includes thirty six pieces. If nine pieces fall into species class BA, 20 pieces are SP and seven pieces are FI, then the BA distribution is 36/9 or 1 in 4, SP is 36/20 or 1 in 1.8, and FI is 36/7 or 1 in 5.1. If there are four hundred and twenty five pieces in the pile, there will be approximately 425/4 or 106 BA, 425/1.8 or 236 SP, and 425/5.1 or 83 FI. The same technique may be used for other classes, such as diameters, lengths, and grades.

5. If the piles can be tied into an existing weight scale population, that is, if it is known that the pile to be measured is from a production run that closely matches the profile that has been previously sampled as part of a weight scale strata, the statistical values from that series of weight scale samples will provide a detailed profile of the characteristics of the pile

12.6.4.2 Measuring the Pile and Applying a Factor

This method will represent a volume with reasonable satisfaction but may not provide enough detail for species and grade combinations:

1. Measure the height of the pile at 2 m intervals within 0.1 m. If the pile contains lengths exceeding 5 m or is predominately sorted with butts one way, it is necessary to take height measurements down both sides of the pile. Height measurements and length measurements are related. (See item 3 and Figure 12.9).

2. Find the average height of the pile by dividing the sum of the pile measurements by the number of measurements.

3. Measure the length of the pile within 0.1 m. Length measurements and height measurements are related, (Figure 12.9). If the total length of the pile is measured, the heights must be taken throughout the full length of the pile. When the length measurement is less than full length, (i.e., "squaring up" the pile, Figure 12.11), height measurements are taken only inside the square.

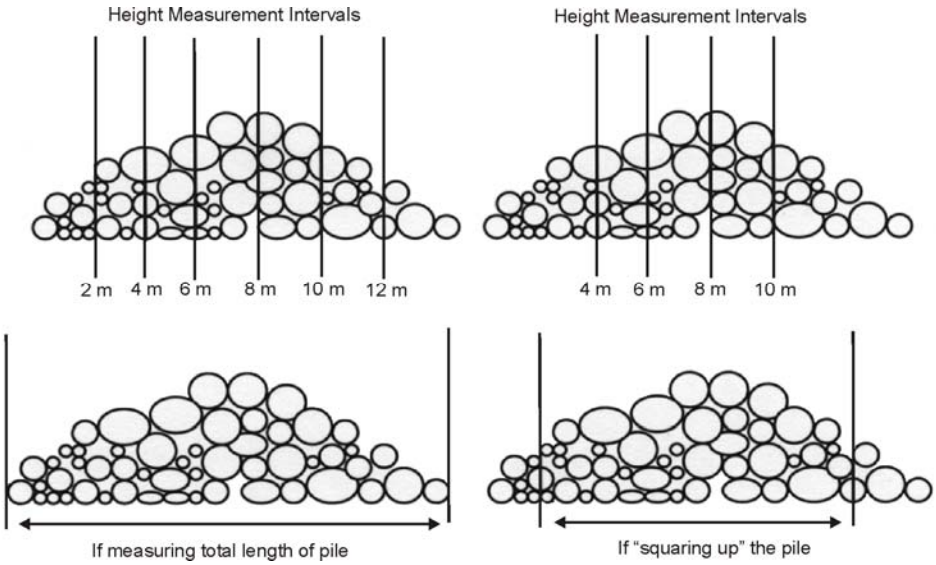

Figure 12.9 Two Methods of Measuring the Length and Height of a Pile.

4. Determine the average width of the pile by taking as many tree length measurements as possible and dividing the sum of the lengths by the number of measurements as in Figure 12.10.

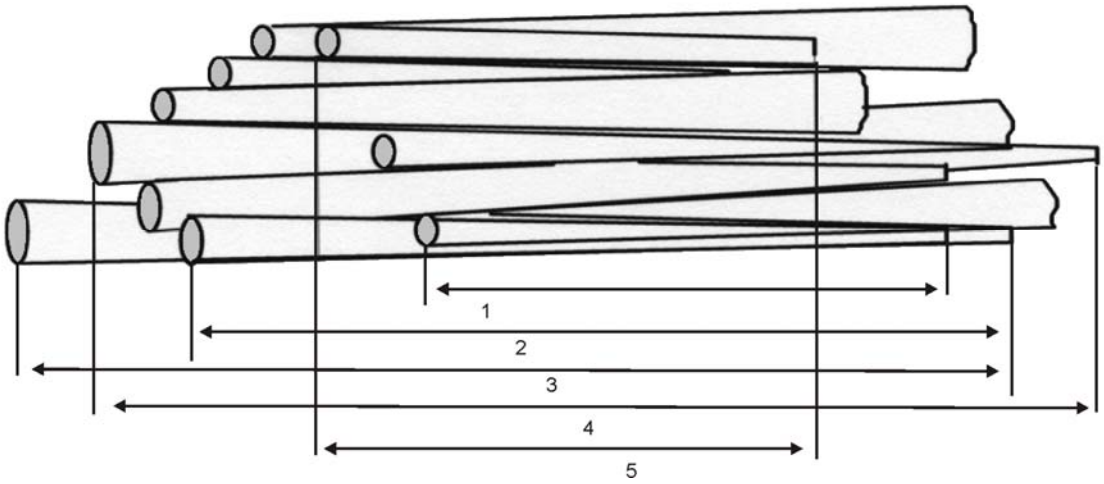

Figure 12.10 Finding the Average Width of a Pile by Averaging Five Representative Tree Lengths.

5. Multiply the pile height by the pile width by the pile length to arrive at the enclosed volume of the pile.

6. Multiply the enclosed volume by a factor of 0.65 to arrive at the estimated firmwood volume of the pile.

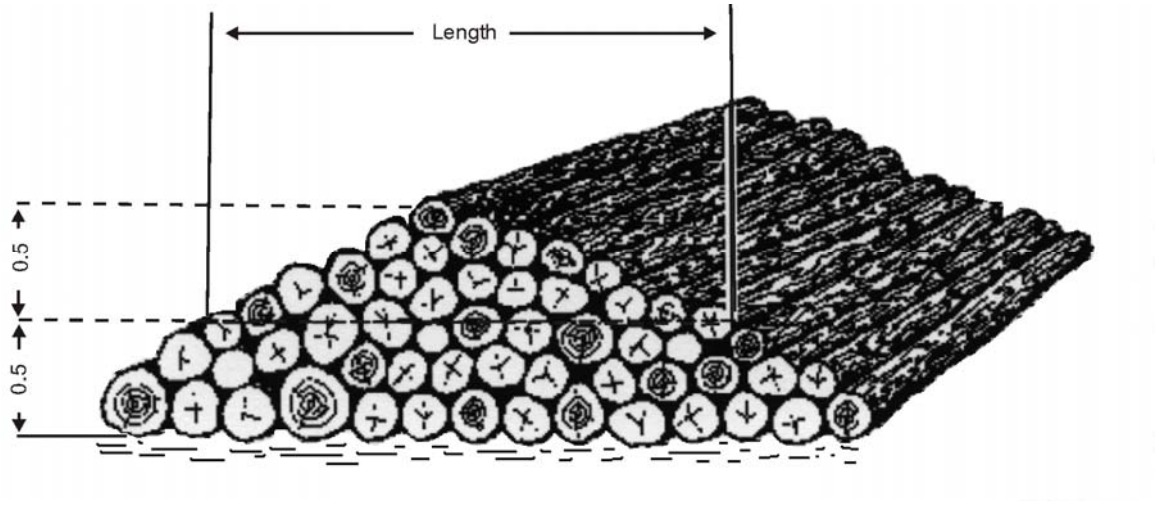

Figure 12.11 Squaring Up a Pile by taking Length Measurement at Exactly One-half the Height of the Pile.

12.6.5 Finding Piece Sample Requirements

Where a sampling method is authorized under Section 7 of the Scaling Regulation, use the following method to determine the number of samples required to meet the required sampling error of ± 1%, 19 times out of 20. From this calculation, the scaler will know with certainty how many pieces must be scaled in a group to achieve statistical reliability.

Assuming a producer is planning to take an estimated 5 000 lodgepole pine fence posts from an operating area. This is the "population" to be sampled, and the scaler will determine the sampling requirements as follows:

1. Scale a number of representative pieces to come up with an average volume per piece, for example,

Post Number	Length	Top	Butt	Volume (dm^3)
1	2.4	6	7	14 + 18 = 32
2	2.4	6	6	14 + 14 = 28
3	2.4	6	7	14 + 18 = 32
4	2.4	7	7	18 + 18 = 36
5	2.4	6	6	14 + 14 = 28
Total volume of five posts:				0.156 m^3
Average volume per post (factor):				0.156 m^3 ÷ 5 = 0.0312 m^3

2. Find the sample with the highest volume, in this case, 0.036 m3.

3. Find the standard deviation SD of the samples by subtracting the average piece volume from the piece with the highest volume and dividing by three,

$$SD = \frac{0.036 - 0.0312}{3} = 0.0016$$

4. Find the relative variance RV by dividing the square of the standard deviation by the square of the average piece volume,

$$RV = \frac{0.0016^2}{0.0312^2} = \frac{0.0000025}{0.0009734} = 0.0025683$$

5. From the total number of estimated pieces N (5 000) and the relative variance C, apply the formula described in Chapter 14 to arrive at the sample size n,

$$\pi = \frac{N \times 2^{2 \times RV}}{(N \times 0.0001) + (4 \times RV)} = \frac{5000 \times 4 \times 0.0025683}{0.5 + 0.01027} = \frac{51.366}{0.51027} = 100.7$$

6. Divide the total number of estimated pieces N by the sample size n to find the sampling intensity SI,

$$SI = \frac{N}{\pi} = \frac{5000}{101} = 49.5 = 50\,(rounded)$$

7. Scale every 50th piece and add it to the sum of the volumes of all of the samples.

8. At the end of the sampling period, divide the total volume of all of the samples Vs by the total number of samples n to arrive at the average volume per piece A. The total number of samples will differ from the sample size calculation in step 5 because the actual production will not likely match the estimated production,

$$A = \frac{Vs}{\pi} = \frac{3.151}{101} = 0.0312$$

9. Multiply the actual piece count by the average volume per piece to find the total volume for the population,

$$Volume = 5000 \times 0.0312 = 156\ m^3$$

10. Prepare a final scale return. Because the sampling term will usually be longer than the required frequency of scale submissions (every month), it is necessary to make adjustments to the final billing. For example, if it takes a period of three months to produce the 5 000 fence posts, returns are prepared based on the average volume per piece available at the time,

	Production	Average Volume/Piece	Volume for month
Month 1	2000 posts	0.03202	64.04 m^3
Month 2	1800 posts	0.0309	55.62 m^3
Month 3	1200 posts	0.0312	37.44 m^3(unadjusted)
Total	5000 posts		157.10 m^3

The total volume in the final return must be adjusted to compensate for the use of an interim average volume per piece. Therefore, the sum of the first two interim monthly returns is subtracted from the total volume found in step 9 to arrive at the volume in the final return.

$$Final\ return\ volume = 156.00 - 64.04 - 55.62 = 36.34\ m^3$$

12.7 Botanical Forest Products

Increasingly, non-timber products are coming into commercial use. At present, the Ministry of Forests and Range does not regulate the harvest of the vast majority of botanical Forest Products, but because they are related to the forest industry and affect forest management decisions and policy, these products will inevitably enter the scaling field. Measurement and recording of these products will become increasingly important to these processes as they evolve.

A current total of 222 recognized botanical forest products are harvested in B.C. These products can be grouped into eight general categories:

- medicinal and pharmaceutical products,
- wild edible mushrooms,
- floral and greenery products,
- wild berries and fruit,
- herb and vegetable products,
- landscaping products,
- craft products, and
- miscellaneous botanical forest products.

12.7.1 Medicinal and Pharmaceutical Products

The following descriptions are for only the most common products.

Product Codes: None

Description: Many plants and fungi produce compounds with medicinal value. Some of these products have long-established markets and represents a continuing economic opportunity. Medicinal plants used for herbal and alternative health products are marketed primarily through small buying houses which process and package the products for the retail market. Practically no information is available on the harvesting of these products except for cascara and western yew.

Extract of cascara bark is recognized as a useful tonic laxative and yew bark is the source of the drug Taxol, an important cancer therapy.

Scale Method(s): There is no requirement that harvesters or collectors of medicinal products to make payments to the Crown at this time. However, with respect to yew bark, it is a requirement to report the amount harvested in kilograms, specified in either dry weight or wet weight. If logs are removed, the logs must be scaled and reported in the same manner as any other commercial timber. Reporting details are available in the *Policy on Yew Bark Harvesting and Collection.*

12.6.2 Wild Edible Mushrooms

Product Codes: None

Description: Forest lands, particularly lodgepole pine forests, are a prime habitat for the Pine mushroom, one of the preferred species for texture and flavour among many groups. Because of its increasing importance as a commercial product, it is necessary to plan the harvesting process to ensure the long term survival of both the forest and the mushroom crop. Chanterelles and Morels are also important commercial species.

Dimensions: The Pine mushroom is sorted into six different grades by maturity, with the Grade 1 "button" being the most valuable, and the Grade 6 "over-mature" being the least valuable. Mushrooms classified in each grade are then weighed.

Scale Method(s): Mushrooms are not scaled or recorded at this time. If trees are removed or damaged, the logs must be scaled and reported in the same manner as any other commercial timber.

12.7.2 Floral and Greenery Products

Product Code: None

Description: The forest contains a huge inventory of plant species, providing many opportunities for craftspersons to design, manufacture and market decorative products such as wreaths and floral arrangements. These products can be grouped into five different categories:

- greenery
- conifer boughs
- essential oils
- basketry fillers
- fresh or dried flowers

Salal, cedar boughs and various ferns are the most prominent of the decorative vegetations at this time.

Dimensions: These products are usually not measured by weight.

Scale Method(s): Cedar foliage harvest is recorded by weight according to agreements between harvesters and district managers. Most other products do not yet require recording. If trees are removed or damaged, the logs must be scaled and reported in the same manner as any other commercial timber.

12.7.3 Wild Berries and Fruit

Product Code: None

Description: At present, little information is available about the commercial harvest of wild berries and fruits. All regions in the province report extensive personal use of local fruits and berries, and is considered to have high recreational value. Thirty-four species are collected on a personal basis and seven species are harvested commercially. The most well known of such plants are the wild blueberry, wild blackberry and wild strawberry. Other popular berries include cranberries, huckleberries, salmonberries and thimbleberries.

12.7.4 Herb and Vegetable Products

Product Code: None

Description: Many plant species in British Columbia's forests have market potential for use as vegetables or food seasoning. There are about twenty-three plants used for these products and there is an increasing interest in their use as food products, both commercial and personally. Although such wild herbs and vegetables not only add variety to diets but also can provide food substitutes for people with acute allergies, there is little information on this industry.

12.7.5 Landscaping Products

Product Code: None

Description: Use of native plants for landscaping is an increasing part of the botanical forest product industry. Entire trees, shrubs or herbs may be collected for personal landscaping or for commercial sale to nurseries and garden centres. Landscaping with native species is a preferred alternative to using cultivated species because these plants are naturally adapted to local conditions.

About fifty-three native plant species used for landscaping in British Columbia have been identified, both for individual use and for commercial harvesting supplying nurseries and garden centres.

Scale Method(s): As the industry evolves, methods of determining volumes will be established according to agreements between the harvesters and District Managers.

12.7.6 Craft Products

Product Code: None

Description: North Americans have a growing interest in craft products made from native plant species. Although the commercial potential for these types of craft products is increasing, relatively little data on the industry is available. Participants report that whole plants, leaves, bark, roots or wood may be used to manufacture craft products and about twenty-four different species are popular.

Dimensions: Highly variable.

Scale Method(s): Many of the products manufactured from wood fall into the classification of stakes and stocks (sticks) described in Section 12.4.4. Other wood products, if over 10 cm in diameter, are scaled as logs. Any trees felled or damaged in the process of gathering craft products are scaled using the B.C. Metric Scale.

12.7.7 Miscellaneous Botanical Forest Products

Description: Several botanical forest products do not fit into any of the previous categories. These products include honey, beeswax, syrup, and smoke woods. At present, little is know about the commercial use of these products.

Scale Method(s): Smoke woods, commonly mountain alder and red alder, are scaled as stakes and stocks (sticks) described in Section 12.4.4. Pieces exceeding the diameters for sticks are scaled as logs.

12.8 Other Product Descriptions

Other products, not classified as Special Forest Products or botanical products, will enter the field of scaling as these products become commercially viable. This section introduces these products and suggests approaches for measuring and recording them where appropriate.

12.8.1 Woodchips and Hogged Tree Material

Woodchips are considered to be Special Forest Products for scaling purposes. Their measurement is the responsibility of an authorized scaler.

Recent developments in chipping technology have seen the introduction of portable debarkers and chippers, which operate at roadsides, on a landing, or at a central processing yard. Under these circumstances, the scaler's responsibility is one of determining the volume, grade and timber mark of all timber processed by the chipper.

While the most reliable methods of accounting for timber processed by the chipper are through either piece scaling or weight scaling all logs prior to chipping, these methods are not often feasible. The scaler's task then is one of either weighing or measuring the compacted volume of all chips produced and then determining the volume of the timber required to produce the chips, while remembering that the species, grade(s) and timber mark(s) must also be accounted for.

The volume of timber required to produce the chips is known as a solid wood equivalent. It is estimated by using a sampling method or use of standard conversion factors. Standard conversion factors generally do not satisfy ministry requirements on three accounts:

1. All timber must be accounted for by predominant species,

2. A volume estimate may be calculated on a container of woodchips or hogged tree material by using the following formula:

   H x L x W x (air space) Factor = Total Volume

3. Chip moisture content (hence density) varies considerably.

As such, a sampling approach may be required. The basic components of a sampling approach include:

1. Randomly select truck or grapple loads for each timber mark,

2. Scale the load accounting for volume, grade and species,

3. Process the same load through the chipper,

4. Weigh the chip production,

5. Calculate the round wood volume/green chip weight conversion factor for each sample,

6. From all the samples taken, calculate the average factor (using the sum of all the sample weights and the sum of all the sample volumes), and

7. Calculate the firm wood volumes for each mark for billing purposes by applying the factor to the total production weight for a given period.

For example:

1. From all samples scaled, 57 m3 of round wood produced 35 tonnes (35 000 kg) of green chips,

2. The conversion factor derived from dividing the volume by the weight, (57 m3/35 t) = 1.628 5 m3 of firm wood per tonne of chips, and

3. If during the month 1 200 tonnes of chips are produced, the round wood (or firm wood) volume for stumpage billing and cut control purposes is calculated as, 1 200 t x 1.628 5 = 1 954.2 m3.

The above example is greatly simplified for conceptual purposes. In reality, because log grades and species must be accounted for, separate ratios must be developed for each species/grade combination. For example, using the same sample, if 20 m3 of the sample is HE grade Z and 37 m3 is HE grade X, the ratios are calculated as follows:

- HE Z ratio = 20 m3/35 t = 0.571 4 m3/tonne, and

- HE X ratio = 37 m3/35 t = 1.057 1 m3/tonne.

For recording and billing purposes, if 1 200 tonnes of chips were produced in a month from a mark, the volume would be calculated as follows:

- HE Z volume = 0.571 4 m3/t x 1 200 t = 685.7 m3, and

- HE X volume = 1.057 1 m3/t x 1 200 t = 1 268.5 m3, a total volume of 1 954.2 m3.

As remote chipping grows in prominence, more standardized scaling and recording procedures will likely be implemented throughout the ministry.

12.9 Condensed Table of Half Volumes

This table of half volumes is for the convenience of scalers and compilers to obtain volumes when other means are not available.

Volumes are expressed in cubic decimetres to avoid the use of a decimal point in the tables. All volumes may be readily changed from cubic decimetres to cubic metres by dividing by 1000.

The half volumes are used rather than the full volumes of cylinders are used to simplify computation.

12.9.1 Application of the Table

To determine the volume of a log from this table, find the half volumes for the following dimensions:

- top diameter in rads and the length, and
- butt diameter in rads and the length.

The sum of the half volumes will equal the volume of the log in dm3 and division by 1000 will give the volume in m3.

Only lengths in increments of 1 to 10 m are shown;

To find the volume of a fraction of a metre, move the decimal place to the left by one point. For example, the volume for a length of 0.4 m is found by using the values in the 4 m column divided by 10.

To find the volume of a log longer than 10 m, add the values in applicable columns. For example, for a 14 m log, add the 10 m half volumes to the 4 m half volumes for the given diameters.

In combination, the volume of any length of log can be compiled. For example, the volume of a 14.4 m log is found by adding the half volumes of a 10 m log, the half volumes of a 4 m log, and for the 0.4 m, 1/10th of the half volumes of a 4 m log.

Table 12-3 Table of Half Volumes of Cylinders in dm^3

Diameter	Length in Metres									
rads	1.0	2.0	3.0	4.0	5.0	6.0	7.0	8.0	9.0	10.0
1	0	0	0	0	0	0	1	1	1	2
2	0	1	2	3	3	4	4	5	6	6
3	1	3	4	6	7	8	10	11	13	14
4	3	5	8	10	13	15	18	20	23	25
5	4	8	12	16	20	24	27	31	35	39
6	6	11	17	23	28	34	40	45	51	57
7	8	15	23	31	38	46	54	62	69	77
8	10	20	30	40	50	60	70	80	90	101
9	13	25	38	51	64	76	89	102	115	127
10	16	31	47	63	79	94	110	126	141	157
11	19	38	57	76	95	114	133	152	171	190
12	23	45	68	90	113	136	158	181	204	226
13	27	53	80	106	133	159	186	212	239	265
14	31	62	92	123	154	185	216	246	277	308
15	35	71	106	141	177	212	247	283	318	353
16	40	80	121	161	201	241	281	322	362	402
17	45	91	136	182	227	272	318	363	409	454
18	51	102	153	204	254	305	356	407	458	509
19	57	113	170	227	284	340	397	454	510	567
20	63	126	188	251	314	377	440	503	565	628
21	69	139	208	277	346	416	485	554	623	693
22	76	152	228	304	380	456	532	608	684	760
23	83	166	249	332	415	499	582	665	748	831
24	90	181	271	362	452	543	633	724	814	905
25	98	196	295	393	491	589	687	785	884	982
26	106	212	319	425	531	637	743	849	956	1062
27	115	229	344	458	573	687	802	916	1031	1145
28	123	246	369	493	616	739	862	985	1108	1232
29	132	264	396	528	661	793	925	1057	1189	1321
30	141	283	424	565	707	848	990	1131	1272	1414
31	151	302	453	604	755	906	1057	1208	1359	1510
32	161	322	483	643	804	965	1126	1287	1448	1608
33	171	342	513	684	855	1026	1197	1368	1540	1711
rads	1.0	2.0	3.0	4.0	5.0	6.0	7.0	8.0	9.0	10.0
34	182	363	545	726	908	1090	1271	1453	1634	1816
35	192	385	577	770	962	1155	1347	1539	1732	1924
36	204	407	611	814	1018	1221	1425	1629	1832	2036
37	215	430	645	860	1075	1290	1505	1720	1935	2150
38	227	454	680	907	1134	1361	1588	1815	2041	2268
39	239	478	717	956	1195	1434	1672	1911	2150	2389
40	251	503	754	1005	1257	1508	1759	2011	2262	2513
41	264	528	792	1056	1320	1584	1848	2112	2376	2641
42	277	554	831	1108	1385	1663	1940	2217	2494	2771
43	290	581	871	1162	1452	1743	2033	2324	2614	2904
44	304	608	912	1216	1521	1825	2129	2433	2737	3041
45	318	636	954	1272	1590	1909	2227	2545	2863	3181

Diameter	Length in Metres									
rads	1.0	2.0	3.0	4.0	5.0	6.0	7.0	8.0	9.0	10.0
46	332	665	997	1330	1662	1994	2327	2659	2991	3324
47	347	694	1041	1388	1735	2082	2429	2776	3123	3470
48	362	724	1086	1448	1810	2171	2533	2895	3257	3619
49	377	754	1131	1509	1886	2263	2640	3017	3394	3771
50	393	785	1178	1571	1963	2356	2749	3142	3534	3927
51	409	817	1226	1634	2043	2451	2860	3269	3677	4086
52	425	849	1274	1699	2124	2548	2973	3398	3823	4247
53	441	882	1324	1765	2206	2647	3089	3530	3971	4412
54	458	916	1374	1832	2290	2748	3206	3664	4122	4580
55	475	950	1425	1901	2376	2851	3326	3801	4276	4752
56	493	985	1478	1970	2463	2956	3448	3941	4433	4926
57	510	1021	1531	2041	2552	3062	3572	4083	4593	5104
58	528	1057	1585	2114	2642	3170	3699	4227	4756	5284
59	547	1094	1640	2187	2734	3281	3828	4374	4921	5468
60	565	1131	1696	2262	2827	3393	3958	4524	5089	5655
61	584	1169	1753	2338	2922	3507	4091	4676	5260	5845
62	604	1208	1811	2415	3019	3623	4227	4831	5434	6038
63	623	1247	1870	2494	3117	3741	4364	4988	5611	6234
64	643	1287	1930	2574	3217	3860	4504	5147	5791	6434
65	664	1327	1991	2655	3318	3982	4646	5309	5973	6637
66	684	1368	2053	2737	3421	4105	4790	5474	6158	6842
67	705	1410	2115	2821	3526	4231	4936	5641	6346	7051
68	726	1453	2179	2905	3632	4358	5084	5811	6537	7263
69	748	1496	2244	2991	3739	4487	5235	5983	6731	7479
70	770	1539	2309	3079	3848	4618	5388	6158	6927	7697
71	792	1584	2376	3167	3959	4751	5543	6335	7127	7918
72	814	1629	2443	3257	4072	4886	5700	6514	7329	8143
73	837	1674	2511	3348	4185	5022	5860	6697	7534	8371
74	860	1720	2581	3441	4301	5161	6021	6881	7742	8602
75	884	1767	2651	3534	4418	5301	6185	7069	7952	8836
76	907	1815	2722	3629	4536	5444	6351	7258	8166	9073
77	931	1863	2794	3725	4657	5588	6519	7451	8382	9313
78	956	1911	2867	3823	4778	5734	6690	7645	8601	9557
79	980	1961	2941	3921	4902	5882	6862	7843	8823	9803
80	1005	2011	3016	4021	5027	6032	7037	8042	9048	10053
81	1031	2061	3092	4122	5153	6184	7214	8245	9275	10306
82	1056	2112	3169	4225	5281	6337	7393	8450	9506	10562
83	1082	2164	3246	4328	5411	6493	7575	8657	9739	10821
84	1108	2217	3325	4433	5542	6650	7758	8867	9975	11084
85	1135	2270	3405	4540	5675	6809	7944	9079	10214	11349
86	1162	2324	3485	4647	5809	6971	8132	9294	10456	11618
87	1189	2378	3567	4756	5945	7134	8323	9511	10700	11889
88	1216	2433	3649	4866	6082	7299	8515	9731	10948	12164
89	1244	2488	3733	4977	6221	7465	8710	9954	11198	12442
90	1272	2545	3817	5089	6362	7634	8906	10179	11451	12723

12.9.2 Table of Full Volumes for Round Fence Posts

The following table is provided for obtaining volumes of round fence posts in a stack or pile. When sampling a stack, it is often very difficult to match the top and butt of inner posts. By measuring only the top diameter and the length of a post, the table will provide the full volume of the post in cubic metres, using known taper curves to accurately estimate the butt diameter. The scaler should sample a number of pieces where both tops and butt can be measured before using this table, so that the validity of the taper factor is proven in a particular application.

Table 12-4 Table of Full Volume (m3) for Top Measured Round Fence Posts

Top Diameter	2	3	4	5	6	7	8	9	10	11
Assumed Taper in rads per Metre			0.500							
Lengths	Vol.	Vol.	Vol.	Vol.	Vol.	Vol.	Vol.	Vol.	Vol.	Vol.
0.1	0.000	0.000	0.000	0.000	0.001	0.002	0.002	0.003	0.003	0.004
0.2	0.000	0.000	0.001	0.002	0.002	0.003	0.004	0.005	0.006	0.008
0.3	0.000	0.000	0.002	0.002	0.003	0.005	0.006	0.008	0.010	0.012
0.4	0.000	0.001	0.002	0.003	0.005	0.006	0.008	0.010	0.013	0.015
0.5	0.000	0.002	0.003	0.004	0.006	0.008	0.010	0.013	0.016	0.019
0.6	0.000	0.002	0.003	0.005	0.007	0.010	0.013	0.016	0.019	0.023
0.7	0.001	0.002	0.004	0.006	0.008	0.011	0.015	0.019	0.023	0.027
0.8	0.001	0.003	0.004	0.007	0.010	0.013	0.017	0.021	0.026	0.032
0.9	0.001	0.003	0.005	0.008	0.011	0.015	0.019	0.024	0.030	0.036
1.0	0.002	0.003	0.006	0.009	0.012	0.017	0.021	0.027	0.033	0.040
1.1	0.002	0.004	0.006	0.010	0.014	0.018	0.024	0.030	0.037	0.044
1.2	0.002	0.004	0.007	0.011	0.015	0.020	0.026	0.033	0.040	0.048
1.3	0.002	0.005	0.008	0.012	0.016	0.022	0.028	0.036	0.044	0.052
1.4	0.002	0.005	0.008	0.013	0.018	0.024	0.031	0.039	0.047	0.057
1.5	0.003	0.005	0.009	0.014	0.019	0.026	0.033	0.041	0.051	0.061
1.6	0.003	0.006	0.010	0.015	0.021	0.028	0.036	0.044	0.054	0.065
1.7	0.003	0.006	0.011	0.016	0.022	0.030	0.038	0.048	0.058	0.070
1.8	0.004	0.007	0.011	0.017	0.024	0.032	0.040	0.051	0.062	0.074
1.9	0.004	0.007	0.012	0.018	0.025	0.033	0.043	0.054	0.066	0.079
2.0	0.004	0.008	0.013	0.019	0.027	0.035	0.046	0.057	0.069	0.083
2.1	0.004	0.008	0.014	0.020	0.028	0.038	0.048	0.060	0.073	0.088
2.2	0.005	0.009	0.015	0.021	0.030	0.040	0.051	0.063	0.077	0.092
2.3	0.005	0.009	0.015	0.023	0.031	0.042	0.053	0.066	0.081	0.097
2.4	0.005	0.010	0.016	0.024	0.033	0.044	0.056	0.070	0.085	0.102
2.5	0.006	0.011	0.017	0.025	0.035	0.046	0.059	0.073	0.089	0.106
2.6	0.006	0.011	0.018	0.026	0.036	0.048	0.061	0.076	0.093	0.111
2.7	0.006	0.012	0.019	0.028	0.038	0.050	0.064	0.080	0.097	0.116
2.8	0.007	0.012	0.020	0.029	0.040	0.053	0.067	0.083	0.101	0.121
2.9	0.007	0.013	0.021	0.030	0.042	0.055	0.070	0.087	0.105	0.126
3.0	0.008	0.014	0.022	0.032	0.043	0.057	0.073	0.090	0.109	0.131
3.1	0.008	0.014	0.023	0.033	0.045	0.059	0.076	0.094	0.114	0.136
3.2	0.009	0.015	0.024	0.034	0.047	0.062	0.078	0.097	0.118	0.141
3.3	0.009	0.016	0.025	0.036	0.049	0.064	0.081	0.101	0.122	0.146
3.4	0.009	0.017	0.026	0.037	0.051	0.067	0.084	0.104	0.127	0.151
3.5	0.010	0.017	0.027	0.039	0.053	0.069	0.087	0.108	0.131	0.156
3.6	0.010	0.018	0.028	0.040	0.055	0.072	0.091	0.112	0.135	0.161
3.7	0.011	0.019	0.029	0.042	0.057	0.074	0.094	0.115	0.140	0.166
3.8	0.011	0.020	0.030	0.043	0.059	0.077	0.097	0.119	0.144	0.172
3.9	0.012	0.021	0.031	0.045	0.061	0.079	0.100	0.123	0.149	0.177
4.0	0.013	0.021	0.033	0.046	0.063	0.082	0.103	0.127	0.153	0.182
4.1	0.013	0.022	0.034	0.048	0.065	0.084	0.106	0.131	0.158	0.188
4.2	0.014	0.023	0.035	0.050	0.067	0.087	0.110	0.135	0.163	0.193
4.3	0.014	0.024	0.036	0.051	0.069	0.090	0.113	0.139	0.167	0.199
4.4	0.015	0.025	0.038	0.053	0.071	0.092	0.116	0.143	0.172	0.204
4.5	0.016	0.026	0.039	0.055	0.074	0.095	0.120	0.147	0.177	0.210
4.6	0.016	0.027	0.040	0.057	0.076	0.098	0.123	0.151	0.182	0.215

4.7	0.017	0.028	0.042	0.058	0.078	0.101	0.126	0.155	0.186	0.221
4.8	0.018	0.029	0.043	0.060	0.080	0.104	0.130	0.159	0.191	0.227
4.9	0.018	0.030	0.044	0.062	0.083	0.106	0.133	0.163	0.196	0.232
5.0	0.019	0.031	0.046	0.064	0.085	0.109	0.137	0.167	0.201	0.238
5.1	0.020	0.032	0.047	0.066	0.087	0.112	0.140	0.172	0.206	0.244
5.2	0.021	0.033	0.049	0.068	0.090	0.115	0.144	0.176	0.211	0.250
5.3	0.021	0.034	0.050	0.070	0.092	0.118	0.148	0.180	0.216	0.256
5.4	0.022	0.035	0.052	0.071	0.095	0.121	0.151	0.185	0.222	0.262
5.5	0.023	0.036	0.053	0.073	0.097	0.124	0.155	0.189	0.227	0.268
5.6	0.024	0.038	0.055	0.076	0.100	0.128	0.159	0.194	0.232	0.274
5.7	0.025	0.039	0.056	0.078	0.102	0.131	0.163	0.198	0.237	0.280
5.8	0.026	0.040	0.058	0.080	0.105	0.134	0.167	0.203	0.243	0.286
5.9	0.026	0.041	0.060	0.082	0.108	0.137	0.170	0.207	0.248	0.292
6.0	0.027	0.042	0.061	0.084	0.110	0.140	0.174	0.212	0.254	0.299
6.1	0.028	0.044	0.063	0.086	0.113	0.144	0.178	0.217	0.259	0.305
6.2	0.029	0.045	0.065	0.088	0.116	0.147	0.182	0.221	0.265	0.311
6.3	0.030	0.046	0.066	0.090	0.118	0.150	0.186	0.226	0.270	0.318
6.4	0.031	0.048	0.068	0.093	0.121	0.154	0.190	0.231	0.276	0.324
6.5	0.032	0.049	0.070	0.095	0.124	0.157	0.195	0.236	0.281	0.331
6.6	0.033	0.050	0.072	0.097	0.127	0.161	0.199	0.241	0.287	0.337
6.7	0.034	0.052	0.074	0.100	0.130	0.164	0.203	0.246	0.293	0.344
6.8	0.035	0.053	0.076	0.102	0.133	0.168	0.207	0.251	0.299	0.351
6.9	0.037	0.055	0.077	0.104	0.136	0.171	0.211	0.256	0.304	0.357
7.0	0.038	0.056	0.079	0.107	0.139	0.175	0.216	0.261	0.310	0.364
7.1	0.039	0.058	0.081	0.109	0.142	0.179	0.220	0.266	0.316	0.371
7.2	0.040	0.059	0.083	0.112	0.145	0.182	0.225	0.271	0.322	0.378
7.3	0.041	0.061	0.085	0.114	0.148	0.186	0.229	0.276	0.328	0.385
7.4	0.042	0.063	0.088	0.117	0.151	0.190	0.234	0.282	0.334	0.392
7.5	0.044	0.064	0.090	0.120	0.154	0.194	0.238	0.287	0.341	0.399
7.6	0.045	0.066	0.092	0.122	0.158	0.198	0.243	0.292	0.347	0.406
7.7	0.046	0.068	0.094	0.125	0.161	0.202	0.247	0.298	0.353	0.413
7.8	0.048	0.069	0.096	0.128	0.164	0.206	0.252	0.303	0.359	0.420
7.9	0.049	0.071	0.098	0.130	0.168	0.210	0.257	0.309	0.366	0.428
8.0	0.050	0.073	0.101	0.133	0.171	0.214	0.261	0.314	0.372	0.435
8.1	0.052	0.075	0.103	0.136	0.174	0.218	0.266	0.320	0.378	0.442
8.2	0.053	0.077	0.105	0.139	0.178	0.222	0.271	0.325	0.385	0.450
8.3	0.055	0.078	0.107	0.142	0.181	0.226	0.276	0.331	0.391	0.457
8.4	0.056	0.080	0.110	0.145	0.185	0.230	0.281	0.337	0.398	0.465
8.5	0.057	0.082	0.112	0.148	0.188	0.234	0.286	0.343	0.405	0.472
8.6	0.059	0.084	0.115	0.151	0.192	0.239	0.291	0.348	0.411	0.480
8.7	0.061	0.086	0.117	0.154	0.196	0.243	0.296	0.354	0.418	0.487
8.8	0.062	0.088	0.120	0.157	0.199	0.247	0.301	0.360	0.425	0.495
8.9	0.064	0.090	0.122	0.160	0.203	0.252	0.306	0.366	0.432	0.503
9.0	0.065	0.092	0.125	0.163	0.207	0.256	0.311	0.372	0.439	0.511
9.1	0.067	0.094	0.127	0.166	0.211	0.261	0.317	0.378	0.446	0.519
9.2	0.069	0.096	0.130	0.169	0.214	0.265	0.322	0.384	0.453	0.527
9.3	0.070	0.099	0.133	0.173	0.218	0.270	0.327	0.391	0.460	0.535
9.4	0.072	0.101	0.135	0.176	0.222	0.274	0.333	0.397	0.467	0.543
9.5	0.074	0.103	0.138	0.179	0.226	0.279	0.338	0.403	0.474	0.551
9.6	0.076	0.105	0.141	0.183	0.230	0.284	0.344	0.409	0.481	0.559
9.7	0.078	0.108	0.144	0.186	0.234	0.289	0.349	0.416	0.488	0.567
9.8	0.079	0.110	0.147	0.189	0.238	0.293	0.355	0.422	0.496	0.575
9.9	0.081	0.112	0.149	0.193	0.242	0.298	0.360	0.429	0.503	0.584
10.0	0.083	0.115	0.152	0.196	0.247	0.303	0.366	0.435	0.511	0.592
10.1	0.085	0.117	0.155	0.200	0.251	0.308	0.372	0.442	0.518	0.601
10.2	0.087	0.120	0.158	0.203	0.255	0.313	0.377	0.448	0.526	0.609
10.3	0.089	0.122	0.161	0.207	0.259	0.318	0.383	0.455	0.533	0.618
10.4	0.091	0.125	0.164	0.211	0.264	0.323	0.389	0.462	0.541	0.626
10.5	0.093	0.127	0.168	0.215	0.268	0.328	0.395	0.469	0.549	0.635
10.6	0.095	0.130	0.171	0.218	0.273	0.333	0.401	0.475	0.556	0.644
10.7	0.098	0.132	0.174	0.222	0.277	0.339	0.407	0.482	0.564	0.653
10.8	0.100	0.135	0.177	0.226	0.282	0.344	0.413	0.489	0.572	0.662
10.9	0.102	0.138	0.180	0.230	0.286	0.349	0.419	0.496	0.580	0.670

The Weight Scale System 13

Weight scaling is a sampling method where only a portion of the total production is measured or sampled, unlike piece scaling where all logs are measured for volume and grade. Based on the sample results, an estimate can be made about the total production. This chapter provides an overview of the Weight Scale System and an introduction to the statistical concepts that underlie this system. A more detailed look at how these concepts are applied to satisfy the data needs of industry and government follows in the *Weight Scale Sampling* chapter.

Figure 13.1 A Loaded Logging Truck on the Platform of a Weight Scale.

13.1 Weight Scaling - Overview of the System

13.1.1 Background

Weight scaling was introduced in the BC Interior in the early 1960s as a cost effective and reliable alternative to measuring every log to be scaled. The introduction of weight scaling corresponded with the rapid growth of the Interior forest industry. The 1960s also saw the introduction of close utilization harvesting practices, which resulted in greatly increased truck piece counts and reduced average piece sizes. Based on HBS data, in 2006, some 97% of the Interior harvest was scaled with the weight scale system.

On the Coast, because of less consistent forest types, more complex grading, sorting and marketing needs and more complex transportation and log handling opportunities, weight scaling plays a much less prominent role. Based on HBS data in 2006, some 31% of the coastal harvest was scaled with the weight scale system.

While the concepts of precision and accuracy will be explored in detail later in this, and the following chapter, it should be understood that the volume produced through weight scaling is an estimate of the actual volume. The actual volume is not known unless every load going over the weight scale is piece scaled. As such, weight scaling is a sampling method and volumes calculated using it are estimates of the actual volumes.

So, unlike piece scaling where all logs are measured, weight scaling is a sampling method where only a portion of the total production is measured or sampled. Based on the sample results, an estimate is made about the total production.

13.1.2 Estimating Volumes Under Weight Scaling

Under weight scaling, all truckloads are weighed and samples are selected at random and scaled for volume and grade. All logs on each truckload must carry the same timber mark. Conceptually, volumes are estimated by summing the total weight or mass of the total production and multiplying this sum by the volume/weight ratio derived from the samples, as shown in the following formula (Figure 13.2).

	Volume	=	$\text{Weight} \frac{\sum \text{Volume}_{\text{samples}}}{\sum \text{Weight}_{\text{samples}}}$
Where:	Volume	=	total volume estimate
	Weight	=	total net weight of all loads
	$\sum \text{Volume}_{\text{samples}}$	=	total volume of all sample loads
	$\sum \text{Weight}_{\text{samples}}$	=	total net weight of all sample loads
	$\frac{\sum \text{Volume}_{\text{samples}}}{\sum \text{Weight}_{\text{samples}}}$	=	the sample ratio or simply the ratio

Figure 13.2 Conceptual Formula for Estimating Volumes.

In practice, this same principle is followed to determine volumes for each timber mark, for each species and for each timber grade.

13.1.3 Objectives of the Weight Scale System

The reliability of the estimate you wish to achieve is known as the "sampling error objective" and is set under the Scaling Regulation at 1% for the sampling plan. It requires that 95% of the time, the total estimated volume in one year will be within 1% of the actual volume (which is the same as within 1% of the volume you would determine if you scaled every piece). In addition to this objective, data users, including the Forest Service and Industry, may set other objectives to meet their respective data needs.

To reduce the total number of samples required and to better meet other data needs, weight scale populations may be subdivided into groups of truckloads that have similar qualities (e.g., timber mark, stumpage value, and ownership or quality). These groups are known as strata and the process of identifying and subdividing the population into strata is known as stratification. The term "stratum" is singular for strata. The formation of strata will never cause a bias, and should not cause more samples to be needed. The incorrect assignment of a load to a particular stratum cannot cause a bias (but it will probably increase the sampling error), and once a load has been assigned to a stratum it must not be reassigned based on the scale results. The exception to that would be the incorrect recording of a timber mark.

13.1.4 Elements of Weight Scaling

13.1.4.1 Agreement

Prior to beginning weight scaling, the Forest Service and weight scale operator (usually a licensee), must enter into an agreement to use weight scaling for a given population. The population typically includes the company's own production as well as any purchase or trade volumes delivered to the scale over a 12-month period. This 12-month period is known as the cyclic billing period.

The definition of a population is:

The aggregate of all loads of timber scaled at a scale site or a group of scale sites owned by the same holder within a forest region to be sampled in a 12-month period for which you wish to estimate volumes for timber marks, grades and species.

Included under the agreement is provision for the physical weight scale site, the weighing of loads, the selection of samples, spreading and scaling sample loads, staffing, as well as documentation and reporting requirements.

In all cases, the scale and weighing equipment is owned and operated by the scale holder. The population holder is responsible for preparing the sampling plan and the Forest Service is responsible for approving the sampling plan.

The user and the Forest Service are responsible for:

- monitoring the sampling plan,
- ensuring satisfactory data and processing controls are in place, and
- ensuring scaling and processing standards are maintained.

13.1.4.2 The Weight Scale Sample Plan

Central to weight scaling is the sample plan which contains the strategy to sample enough loads to meet the population and other sampling objectives. This plan is prepared largely from the scale holder's production forecast that is comprised of an estimate of the timber to be scaled for the cyclic billing period. Stratum Advisor in HBS has many tools for individual sample plans and must be used to complete this annual plan. Population holders must propose and monitor their sampling plans.

13.1.4.3 Sampling Frequency

The sampling frequency sets the rate of sampling in each stratum required to meet the sampling objectives. Under weight scaling, only those loads selected as samples are physically scaled. Sample selection is a computerized process that is a program function of the scale holder's weight scale hardware and the scale holder is responsible for ensuring that all sampling is fully random. All loads must have an equal opportunity of

being selected. The ability to predict samples must not be possible by the scale site holder, operator, timber weigher or others at any time. Sample selection provided by systems software must conform to the standards set by MOFR.

The MOFR is responsible for programming sampling frequencies into the scale holder's weight scale computer. This is usually done by district staff.

13.1.4.4 Weighing Loads and Processing Samples

The scale holder is responsible for weighing all loads and ensuring loads selected as samples are scaled and reported to the Forest Service for processing.

All weighing and weighing equipment must conform to standards set and regulated by *Measurement Canada*, an agency of Industry Canada.

13.1.4.5 Compilation and Reporting Requirements

Data is submitted daily or as per the HBS submission requirements to the Harvest Billing System and reports are generated from this data. Sample load details are compiled and reported as they are scaled. Individual reporting and submission requirements are detailed in the Scale Site Authorization document.

See the documenting and reporting section of this manual for a more detailed explanation of these requirements.

13.1.4.6 Unattended Scale Sites (not operated by a Timber Weigher)

- All truck weighing and weighing equipment must comply with both the Attended and the Unattended scale site authorization requirements.
- All samples selected must have an audio/visual or other method of informing industry/ministry staff that a load has been selected as a sample.
- Cameras may be placed strategically to capture the load on the scale, drivers entering load information, required sample information being captured and the sample unloaded to ensure load integrity.
- The person responsible for stratification must be appointed as an acting scaler and trained to properly operate the scale site.

13.2 Statistics Underlying the Weight Scale System

Because weight scaling is a sampling approach, its theoretical foundation lies in statistical sampling convention. Statistics provide answers to some basic questions in weight scale sampling:

1. How many samples do we need to take to provide reliable results?

2. How can we conduct sampling to avoid biased results?

3. How can we achieve more efficient sampling (acceptable results at lower cost)?

4. How good are our results?

While the formulae underlying weight scaling are complex for most users, it is most important to concentrate on their significance rather than the details of each calculation. This chapter attempts to provide only a basic introduction to the statistics and statistical conventions relating to weight scaling. The detailed statistical formulae that are used in weight scaling are summarized in Section 13.3.

13.2.1 Statistical Concepts

13.2.1.1 An Overview of Estimating Using Statistics

In weight scaling the chief objective is to estimate the total volume delivered over the weight scale in a year (cyclic billing year). In determining an estimate, one could simply use historic data, take some samples, or use some other estimating approach. While such an estimate might suffice for some purposes, the importance placed on scale data by government and industry requires that our estimates be reliable and it must be known how reliable they are. This assurance can only be achieved by introducing statistics into the estimates.

As discussed under Section 13.1.2, weight scale estimates are made using a sampling method. To ensure reliable data results are achieved, instead of simply taking a couple of samples, the starting point must be to determine how many samples to take. The required number of samples (n) is dependent upon two things:

1. How much do the estimated volumes vary from truckload to truckload? (this is measured by the standard deviation (SD) which is in cubic metres (m3)).

2. How good do we wish the results to be? (this is set by regulation at one percent for the sampling plan and is called the sampling error objective (SE)).

If all the individual loads in the population were similar, some very accurate conclusions could be made about the population by taking only a few samples. If, on the other hand, individual truckloads differed greatly from load to load, many more samples would have to be taken to draw the same conclusions.

In the same way, the better we wish our results to be, the more samples we require. And, on the other hand, if we are willing to accept the risk associated with less reliable results, fewer samples will be required. We don't have the option of changing the sampling error for the overall population, but we do have control over the sampling error for subsets of the data ("strata"). This will be discussed in detail later in this chapter and in the *Weight Scale Sampling* chapter.

After it is determined how many samples are required, sampling can begin. Under statistical sampling, it is required that all truckloads have an equal opportunity of being selected as a sample (samples must be selected at random). This is done to avoid bias.

At the end of the year, after all the samples have been taken and all loads have been weighed, calculations must be done to determine how successful the sampling was: (how reliable were the volume estimates). To do this, the question must be asked: "Were our sampling objectives achieved?"

Figure 13.3 shows the relationships between the basic questions that must be asked at the start and end of the year as well as their related statistical relationship. Before proceeding, attempt to relate the foregoing discussion to the diagram. This overview is the conceptual essence of weight scale sampling.

The next sections cover each component of sampling in more detail.

A. Start of the Cyclic Billing Year

Basic question: How many samples do we require?

Basic statistical relationship:

$$n = \left(\frac{SD}{\text{one SE}}\right)^2$$

Where: n = the total number of samples required.

SD = standard deviation = a measure of how much samples ratios vary from truck to truck.

SE = One sampling error = a measure of how reliable we wish our year end volume estimates to be (this is our sampling objective, 1% is 2 SE).

B. During the Year

Weigh all loads and scale randomly selected samples.

C. At the End of the Cyclic Billing Year

Basic questions: How reliable are our estimates?

Did we meet out sampling objective?

Basic statistical relationship:

$$SE = \frac{SD}{\sqrt{n}}$$

Where: SE = sampling error = a measure of how reliable our estimates are. Compared with the sampling objective, we can answer the basic questions - Did we meet our sampling objective? How reliable are our estimated volumes?

SD = standard deviation = at the year end, this is a measure of how much the ratios actually varied from truck to truck.

n = the number of samples we actually took.

Figure 13.3 Conceptual Overview of Weight Scale Sampling.

13.2.1.2 Accuracy and Precision

When we ask ourselves how accurate our results are we are really asking ourselves how close our estimates calculated from our samples are to the actual quantity or value. For weight scaling, we often refer to the sample means that are the ratios (remember ratio x weight = volume). In discussing accuracy, we ask ourselves "how close is the sample mean to the unknown population mean". In sampling, because we do not measure all units, we never really know the actual mean and, as such, we never really know how accurate our estimate is. We do, however, have some understanding through the standard sampling error of how close our sample ratio is to the unknown population ratio. This estimate (Sampling Error) is referred to as precision. The smaller the sampling error, the

better the precision. The sampling error is 0 when all units in the population are measured.

Statisticians often refer to Bias of an estimate. Bias is a distortion of results arising from an incorrect method of sampling, or incorrect measurements. Figure 13.4 shows a dartboard example of bias as well as the difference between precision and accuracy. Note that the darts show good precision (the darts are clustered together), but they reflect an inaccurate result, which is biased.

Bias in weight scale sampling is avoided by ensuring sample selection is completely random and by ensuring that scaling is done correctly. This concept will be explained further in the next chapter.

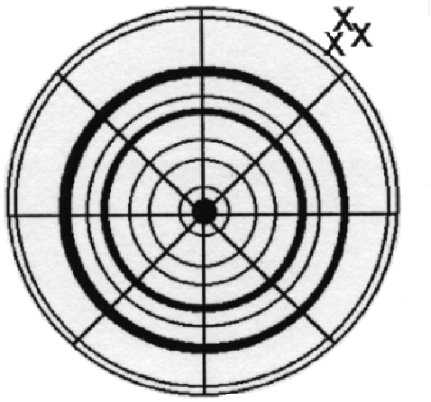

Figure 13.4 In this Dartboard Example, the 3 Darts (x) are Precise but Inaccurate and Biased.

13.2.1.3 Determining the Sample Size

In the previous sections we have discussed the concepts of standard deviation and the sampling error.

The standard deviation is a characteristic of the population that reflects the variation between individual truckload ratios. The sampling error on the other hand, provides us with a measure of how precise our sampling results are at the end of sampling. At the beginning of the sampling year we use the sampling error as the precision (or sampling error objective) we wish to achieve through the sampling. The actual number of samples we require to meet the sampling error objectives is known as the sample size.

While the formula for the sample size is complex, you should understand the relationship between the standard deviation, the sampling error, and the sample size. Functionally it can be presented as the following:

$$n=\left(\frac{SD*2}{SE}\right)^2$$

Where SE is the sampling error at the 95% or t = 2 level (1% for the sampling plan).

You can conclude from this relationship several things:

- the more the truckload ratios vary (the higher the SD) the more samples you require;
- the greater the precision (lower the value of SE) you wish to achieve, the more samples you require;
- similarly, the corollaries of each of these is true, i.e.:
- the less the truckload ratios vary (the lower the SD) the fewer samples you require; and
- the lower the precision (the higher the SE that can be tolerated) the fewer samples you require.

Once the sample size has been established, you must determine the rate of sampling or the sampling frequency. In the case of weight scaling, if a population of 5 000 loads requires 100 samples to meet the sampling objective, the sampling rate is equal to 1 in 50 loads (5 000/100).

In terms of weight scaling, this means that approximately 1 sample out of every 50 loads must be randomly selected as a sample and piece scaled for volume and grade.

13.2.1.4 Stratified Random Sampling

If a population was comprised of a single species, all trees were of equal quality, equal stumpage value, and under a single timber mark (consistent in terms of species, quality, value, and mark holder), sampling of the entire population, as a single unit, would probably provide satisfactory results and sampling costs would be within reason. The normal situation, however, sees weight scale populations as variable in composition. Most weight scale populations are comprised of multiple species and grade combinations, multiple timber marks, small business, major licensee and purchase volumes, salvage timber volumes, along with other variables. Sampling such populations as single units would result in volume estimates of lower precision.

The reasons for low precision and high costs lie in the conceptual relationship between the sampling error, the standard deviation, and the number of samples (sample size).

$$\text{One SE} = \frac{SD}{\sqrt{n}} \text{ or sample size} = n = \left(\frac{SD}{SE}\right)^2$$

If a low SE is required and you are confronted with a high variation among sample units, your only option under this approach would be to increase n (take more samples).

To overcome these deficiencies, Stratified Random Sampling is employed for sampling most forest populations. Under stratified sampling, units of the population can be grouped together on the basis of similarity - usually, the similarity in the ratio caused by the timber having the same weight volume relationship. These groupings are referred to as strata (stratum for singular) or subpopulations. Each stratum is then sampled and stratum estimates (volume/stratum) are combined to give a population estimate (volume for the population).

Stratified random sampling provides several advantages over simple random sampling.

- it provides an estimate of precision and a separate ratio for each stratum,
- population estimates may be more precise with the same number of samples, and
- the required number of samples is often reduced.

Separate answers could be computed from the data without stratification (for instance by timber mark) from the Harvest Billing System data, if better precision was the only objective. Stratification is especially useful when the user wants to shift the sampling into strata with greater value, lower scaling cost, or greater scaling capacity due to physical site characteristics. This reassignment might actually increase the total number of sample loads, but could have other important advantages.

Going back to the basic relationship, it can deduced that if through stratification we can reduce the variation (SD) among sample units within strata to less than that which occurred if we did not stratify, then our estimates will be more precise (a lower SE). One can also expect an increased precision at the stratum level if we, in fact, did reduce the SD within each stratum.

Stratification can be demonstrated through a graph of sample ratios. Figure 13.5 shows a graph of ratios for Population XYZ. This population was stratified into two strata (1 and 2).

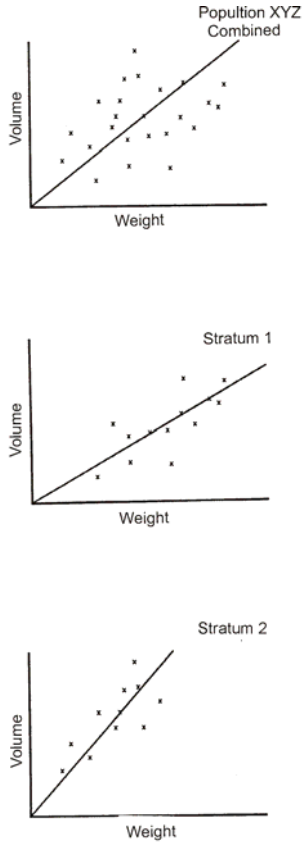

Figure 13.5 Graphs to Show the Impact of Stratification.

From this example you can see stratification resulted in better clustering of data around the ratio line in each of the strata.

In other words, the standard deviation for each of the strata is less than the standard deviation for the combined group. This will allow a reduction of the total sample size for the population. Because stratum data are less variable, we can likely expect data for each stratum to be more precise.

For our purposes, stratification is a useful step to achieving more reliable scale results and more operational convenience and will be discussed more thoroughly in the next chapter.

13.2.1.5 The Weight Scale Sampling Plan

The Weight Scale Sampling Plan is a comprehensive plan to sample the weight scale population. It requires a clear definition of data needs and sampling objectives, and requires estimates of production and standard deviations on a stratum and population basis. The sampling plan provides the foundation for sampling. The sampling plans and procedures to monitor sampling plan progress are documented thoroughly in the next chapter. The Stratum Advisor function of the Harvest Billing System calculates

necessary values and equations and information on its use can be obtained from the HBS Reference Guide for Industry available at:

http://www.for.gov.bc.ca/hva/hbs/HBS_INDUSTRY_GUIDE.pdf

13.2.1.6 Chapter Summary

This chapter has discussed in very general terms the statistics and related relationships behind the weight scale system. To use weight scaling as detailed in the next chapter, all calculations are heavily systematized eliminating the need for long calculations.

While some of this material was covered quite sparingly, it is important to understand some basic relationships and the concepts discussed in this chapter.

You should be equipped to answer some basic questions:

- What is random sampling, and why is it important to weight scale sample selection?
- Given a standard deviation - what does it really mean?
- Given a sampling error - what does it mean in terms of the population and stratum volume estimates?
- What is the relationship between the standard deviation, the sampling error, and the sample size?
- Why do we stratify populations? What are the benefits of stratification?
- How do we allocate the sample size to individual strata?
- What is the relationship between precision, accuracy, and bias?

The next chapter on weight scale sampling assumes a basic understanding of these concepts.

13.3 Summary of Statistical Formulae in Weight Scaling

This section summarizes the statistical formulae that underlie weight scaling. The terminology assumes that readers are familiar with basic statistics.

> This section is for documentation purposes, and scalers are not expected to comprehend this material. The equations from earlier documentation have not been improved for readability, since it is important that the documentation in this appendix relates to former computer programs and past documentation for the weight scaling method in B.C. Minor changes from earlier manuals have been made for typographical errors and to improve statistical clarity for the benefit of specialists.
>
> For those wishing to compare this material to standard statistical textbooks, the estimation of averages and standard deviations use formulae for the common "ratio-of-means" estimator. Once any strata totals and their total variance are computed, they are combined using the usual stratified sampling formulae found in most textbooks.

13.3.1 Ratio of a Stratum

$$r_k = \left(\frac{\sum_{i=1}^{n_k} y_i}{\sum_{i=1}^{n_k} m_i} \right) = \left(\frac{n_k \cdot \bar{y}_k}{n_k \cdot \bar{m}_k} \right) = \left(\frac{\bar{y}_k}{\bar{m}_k} \right) = \frac{\text{average stratum load volume}}{\text{average stratum load weight}}$$

where: y_i denotes the volume of the i-th sampled load from stratum k,

m_i denotes the weight of the i-th sampled load from stratum k,

n_k denotes the number of samples in stratum k, and

r_k denotes the ratio (cubic metres per tonne) for stratum k, and is the same whether you use the totals or averages to calculate the ratio.

The ratio, r_k , is used to estimate the total volume harvested from a stratum when you multiply it times the total weight of all loads for that stratum.

13.3.2 Estimate of Total Volume in a Stratum (From a Sample)

$$\hat{Y}_k = r_k \cdot \left(\sum_{i=1}^{N_k} m_i\right) = r_k N_k \overline{M}_k$$

where: m_i denotes the weight of the i-th load from stratum k,

N_k denotes the number of loads in stratum k,

$\overline{M}_k$ denotes the average weight of a load in stratum k,

r_k denotes the ratio of stratum k, and

$\hat{Y}_k$ denotes the estimated total volume of stratum k.

13.3.3 Estimate of Variance of Total Volume in a Stratum (From a Sample)

$$\mathrm{var}\left(\hat{Y}_k\right) = \left(\frac{N_k^2\left(1-f_k\right)}{n_k}\right) \cdot \left\{\frac{\sum_{i=1}^{n_k}\left(y_i - r_k m_i\right)^2}{n_k - 1} - \left(\frac{\sum_{i=1}^{n_k}\left[\left(y_i - r_k m_i\right)^2 \cdot \left(m_i - \overline{m}_k\right)\right]}{\sum_{i=1}^{n_k}\left(m_i - \overline{m}_k\right)^2}\right) \cdot \left(\overline{m}_k - \overline{M}_k\right)\right\}$$

where: n_k denotes the number of samples in stratum k,

N_k denotes the number of loads in stratum k,

$f_k = \left(\frac{n_k}{N_k}\right)$ denotes the sampling fraction of stratum k,

y_i denotes the volume of the i-th sampled load from stratum k,

m_i denotes the weight of the i-th sampled load from stratum k,

$\overline{m}_k$ denotes the average weight of sampled loads in stratum k,

$\overline{M}_k$ denotes the average weight of all loads in stratum k,

r_k denotes the ratio of stratum k, and

$\mathrm{var}\left(\hat{Y}_k\right)$ denotes the estimated variance of estimated total volume of stratum k.

The Estimate/Variance calculated above is used later in calculating the precision achieved in a stratum.

13.3.4 Estimate of Variance for Load Volumes in a Stratum (From a Sample)

$$s_k^2 = \left(\frac{1}{\overline{M}_k^2} \right) \cdot \left\{ \frac{\sum_{i=1}^{n_k} \left(y_i - r_k m_i \right)^2}{n_k - 1} - \left(\frac{\sum_{i=1}^{n_k} \left[\left(y_i - r_k m_i \right)^2 \cdot \left(m_i - \overline{m}_k \right) \right]}{\sum_{i=1}^{n_k} \left(m_i - \overline{m}_k \right)^2} \right) \cdot \left(\overline{m}_k - \overline{M}_k \right) \right\}$$

where: n_k denotes the number of samples in stratum k,

y_i denotes the volume of the i-th sampled load from stratum k,

m_i denotes the weight of the i-th sampled load from stratum k,

$\overline{m}_k$ denotes the average weight of sampled loads in stratum k,

$\overline{M}_k$ denotes the average weight of all loads in stratum k,

r_k denotes the ratio of stratum k, and

s_k^2 denotes the estimated variance of the load ratios of stratum k.

This figure estimates the inherent variability of the load ratios within a stratum. It differs from the previously calculated variance 13A.3 in the following manner: 13A.3 estimates the variance of the estimated total volume, while this formulae estimates the variance of the individual load predictions. Thus, if additional samples were drawn, the variance in 13A.3 (variance of the average or total) would decrease while the variance above (for the individual loads) would not - except, of course, for random variation due to new samples. This can be seen from the presence of n_k in the denominator of the first term of 13A.3 and from its absence above. As sample size increases, the variance of a mean or total decreases, but the variance of the objects themselves is not expected to change.

13.3.5 Precision of the Estimated Volume of a Stratum (From a Sample)

$$\hat{E}_k = \left(\frac{\sqrt{\text{var}\left(\hat{Y}_k\right)} \cdot t_{.95, n_k - 1}}{\hat{Y}_k} \right) \cdot 100\% \left[K15 \right]$$

where: $\text{var}\left(\hat{Y}_k\right)$ denotes the estimated variance of estimated total volume of stratum k,

$\hat{Y}_k$ denotes the estimated total volume of stratum k,

n_k denotes the number of samples in stratum k,

$t_{.95,n-1}$ denotes the two-sided, 95th percentile of the Student's t distribution with $(n_k - 1)$ degrees of freedom, and

$\hat{E}_k$ denotes the (estimated) precision achieved for stratum k.

The above figure is the precision of a stratum, not the population. Though scaling regulations require that precision of a sampling plan (population) must be at least 1%, 19 times out of 20, they do not specify a target precision for a stratum. In practice, the precision of a stratum will often vary from about 1 to 5%.

13.3.6 Estimate of Total Volume in a Population (Combining Strata)

$$\hat{Y} = \sum_{j=1}^{m} \left(\hat{Y}_j \right)$$

where: $\hat{Y}_j$ denotes the estimated total volume of the j-th stratum, and

m denotes the total number of strata in the population.

13.3.7 Estimate of Variance of Total Volume in a Population (Combining Strata)

$$\text{var}\left(\hat{Y} \right) = \sum_{j=1}^{m} \left[\text{var}\left(\hat{Y}_j \right) \right]$$

where:: $\text{var}\left(\hat{Y}_j \right)$ denotes the estimated variance of total volume in the j-th stratum

m denotes the total number of strata in the population, and

$\text{var}\left(\hat{Y} \right)$ denotes the estimated variance of the estimated total volume in the population.

13.3.8 Precision of the Estimated Total Volume in a Population (From a Sample)

$$\hat{E} = \left(\frac{\sqrt{\text{var}\left(\hat{Y} \right)} \cdot t_{.95,n-m}}{\hat{Y}} \right) \cdot 100\%$$

where: $\text{var}\left(\hat{Y}\right)$ denotes the estimated variance of total volume in the population,

m denotes the total number of strata in the population,

$\hat{Y}$ denotes the estimated total volume in the population,

$t_{.95,n-m}$ denotes the two-sided, 95th percentile of the Student's t distribution with approximately $\left[\left(\sum_{j=1}^{m} n_j\right) - m\right]$ degrees of freedom, and

$\hat{E}$ denotes the precision achieved in the population.

Scaling regulation requires that the above precision be estimated to at least 1%, at a confidence level of 95%.

To estimate volumes and precisions for sub-groups such as species and grades within a stratum, the preceding formulae can still be employed. However, in such instances, the ratios from sampled loads will need to be re-defined as follows: the numerator is defined as the volume of the species and grade of interest, while the denominator remains as the total weight of the sampled load.

13.3.9 Sample Size (for Planning)

13.3.9.1 Required for the Population

$$\tilde{n} = \left\{ \frac{\left(\sum_{j=1}^{m} W_j s_j\right) \cdot \left(\sum_{j=1}^{m} \left(\frac{s_j N_j^2}{W_j}\right)\right)}{\left(\frac{E^2 Y^2}{t_{.95,d}^2}\right) + \left(\sum_{j=1}^{m} N_j s_j^2\right)} \right\}$$

where: m denotes the number of strata in the population,

$W_j = \left(\frac{N_j}{N}\right)$ denotes the proportion of total loads in stratum j,

N_j denotes the total number of loads in stratum j,

N denotes the total number of loads in the population,

s_j denotes the standard deviation of load ratios from stratum j,

E denotes the desired precision (usually set at 0.01),

Y denotes the anticipated total volume in the population,

$t_{.95,d}$ denotes the two-sided, 95th percentile from the Student's t distribution with $\left[\left(\sum_{j=1}^{m} n_j\right) - m\right] = (\tilde{n} - m) = d$ degrees of freedom.

Since the SD is estimated for planning, you can assume it is correct (in which degrees of freedom (d) is infinite) or use the degrees of freedom (sample size minus one) for the historical data that provided your SD estimate for each strata.

$\tilde{n}$ denotes the number of samples required from the entire population.

13.3.9.2 A Stratum Containing a Pre-specified Target Precision (for Planning)

If a stratum contains a target precision, use the following formula to estimate sample sizes for that stratum. In this instance, the number of strata in the population will be one, and the formula reduces to the following:

$$\tilde{n} = \left\{ \frac{\left(s_j^2 \cdot N_j^2\right)}{\left(\frac{E^2 Y^2}{t_{.95,9}^2}\right) + \left(N_j s_j^2\right)} \right\}$$

where: N_j denotes the number of loads in the stratum of interest,

s_j denotes the standard deviation of load ratios in the stratum,

E denotes the desired precision for that stratum,

Y denotes the anticipated total volume in that stratum,

Here again, you can assume the SD for planning (s_j in this equation is correct, so that degrees of freedom for the stratum (d_j) is infinite) or use the degrees of freedom (sample size minus one) for the historical data that provided that SD estimate.

$t_{.95,9}$ denotes the two-sided, 95th percentile from the Student's t distribution with a (d_j) degrees of freedom, and

$\tilde{n}$ denotes the number of samples required from that stratum.

13.3.9.3 Sample Size for a Population Containing Some Pre-specified Strata (for Planning)

If some strata contain precision targets while others do not, use the following formula to estimate the sample sizes for the strata without precision targets:

$$\tilde{n} = \left\{ \frac{\left(\sum_{j=1}^{\tilde{m}} W_j s_j\right) \cdot \left(\sum_{j=1}^{\tilde{m}} \left(\frac{s_j N_j^2}{W_j}\right)\right)}{\left(\frac{E^2 Y^2}{t_{.95,d}^2}\right) - var\left(\hat{Y}_P\right) + \left(\sum_{j=1}^{\tilde{m}} N_j s_j^2\right)} \right\}$$

where:

$\tilde{m}$ denotes the number of free strata in the population ("free" refers to strata without precision targets; summation is over the free strata),

m denotes the number of strata in the entire population,

$W_j = \left(\frac{N_j}{\tilde{N}}\right)$ denotes the proportion of total loads in stratum j,

N_j denotes the number of loads in stratum j,

$\tilde{N}$ denotes the total number of loads in the free strata,

s_j denotes the standard deviation of load ratios from stratum j,

E denotes the desired precision of the entire population (usually set at 0.01),

Y denotes the anticipated total volume in the entire population,

$var\left(\hat{Y}_p\right)$ denotes the variance of the estimated total volume in the non-free (that is, the pre-specified) strata,

$t_{.95,d}$ denotes the two-sided, 95th percentile from the Student's t distribution with "d" as an infinite number of degrees of freedom, or $\left[\left(\sum_{j=1}^{m} n_j\right) - m\right] = \left(\tilde{n} - m\right) = d$ where the sample sizes (n_j) are from the data that estimate that SD.

$\tilde{n}$ denotes the number of samples required from the free strata.

13.3.10 Relative Variance of a Stratum (from a Sample)

$$nj = \tilde{n} \left(\frac{W_i s_i}{\sum_{j=1}^{m} (W_j s_j)} \right) \quad 10$$

where: m denotes the number of strata in the population (or the number of free strata in a constrained population),

$w_j = \left(\frac{N_j}{N} \right)$ denotes the proportion of total loads in stratum j,

s_j denotes the standard deviation of the ratio in stratum j,

$\tilde{n}$ denotes the number of samples required from the entire population (or the free strata), and

n_j denotes the number of samples required from stratum j.

In our notation, represents the estimated sample size to be drawn from a population, while the actual sample size to be drawn is. In other words, may be larger than because some strata may have their sample sizes increased to a minimum number of 5 samples per stratum, while in other cases a sample size will be rounded-up to a whole number.

13.3.11 Relative Variance of a Population (From a Sample)

$$C_k = \cdot \frac{\left(Sk^2 \right)}{\left(\frac{\hat{Y}_k}{N_k} \right)^2} = \left(\frac{N_k^2 \cdot s_k^2}{\hat{Y}_k^2} \right)$$

where: s_k^2 denotes the variance of the load ratios of stratum k(formulae A9.4),

$\hat{Y}_k$ denotes the estimated total volume in stratum k,

N_k denotes the total number of loads harvested from stratum k, and

C_k denotes the relative variance of stratum k.

The relative variance relates the inherent dispersion of a stratum to its average volume, so it is not affected by the number of samples.

One could argue that the relative variance should be based on ratios and not, as is the case here, on volumes. However, differences between the two are likely to be negligible.

13.3.12 Combining Strata

It might be decided to combine strata when it is observed that they had the same ratio in the past. They might also combine them if they have similar definitions and there were operational reasons to do so. In general, it will not reduce the total number of samples needed, or the sampling ratio by combining strata. Therefore, combining data would usually be done for operational simplicity.

If the strata are combined part way through a billing cycle, the strata must have had the same sampling rate and have a similar definition and ratio. If it is decided that strata with different rates should be combined then they should both be closed off and a new combined strata should be created with a new required sample size and sampling rate to be used from that point forward.

13.3.13 Dividing Strata (Splitting of Strata)

It might be decided to split strata for operational purposes or for other reasons, such as using a larger sample ratio in some of the delivered loads to satisfy a contractor, even when they have exactly the same ratio.

It might also be found that a stratum seems to have two distinct ratios, and therefore it is more efficient (requires a smaller total sample size) when they are divided into two different strata. Whether to do this is a question of examining the data with the Harvest Billing System information.

Midway in the billing cycle, dividing old un-sampled loads into several different strata would usually be difficult, and while not necessarily biased it would at least be time cumbersome. In general, the best procedure would be to close the strata at that point and begin several new ones, with different descriptions and quite possibly different sampling rates.

This page is intentionally left blank.

Weight Scale Sampling 14

This chapter applies some of the statistical principles and procedures discussed in the previous chapter to the Weight Scale Sampling Program. Sampling under weight scaling is divided into four main functions:

- Setting up the sampling plan,
- Monitoring sampling plan progress,
- Managing the sampling plan, and
- Maintaining the integrity of weight scaling and the sampling plan.

14.1 Setting Up the Sampling Plan

The Weight Scale Sampling Plan is a comprehensive plan to ensure the weight scale population and data needs are defined and sampling is undertaken to meet some predetermined precision requirements. As such, the sampling plan provides the foundation for weight scale sampling. Its basic components are:

1. Defining the weight scale population - the Production Estimate.
2. Setting the sampling objectives.
3. Stratification to help meet the sampling objectives.
4. Finalizing the Sampling Plan.
5. Selecting and processing samples.

A detailed discussion of each component is in the following sections:

14.1.1 Defining the Weight Scale Population

In the earlier days of weight scaling, the population was simply viewed as the timber cut from an operation in a one-year period. The evolution of the forest industry and the growth of small operators, harvesting on private land, log trading, and other developments now see the population more correctly defined as follows:

> The aggregate of all loads of timber scaled at a scale site or a group of scale sites owned by the same holder within a forest region to be sampled in a twelve-month period for which you wish to estimate volumes for timber marks, grades and species.

Under this definition, the population may consist of a licensee's own production as well as any purchase or trade volumes. It may include any volumes scaled on another party's behalf within a limited distance of 20 km between the weight scale and the other party's processing facility.

Under weight scaling, the population is sampled over a twelve-month period referred to as the Cyclic Billing Period. The cyclic billing period places a time parameter on the definition. Under some circumstances the cyclic billing period may be less than or exceed twelve months. While there are no limiting policies, the Interior cyclic billing period is usually from break-up to break-up or May 1 - April 30. Coastal cyclic billing periods traditionally follow the calendar year.

Weight Scaling or Piece Scaling for Small Population:

While the merits of each situation vary, it is generally considered that acceptable scaling costs under weight scaling for most timber profiles will not be realized unless the annual production going over a weight scale exceeds 500 truckloads. Similarly, the specific data needs of data users may not be met if the annual production is insufficient. On this basis, the Forest Service may direct that all loads be piece scaled if there are insufficient loads in the plan.

14.1.1.1 The Sampling Plan

The sampling plan, which is prepared and submitted to HBS by the weight scale holder, is an estimate of all loads to be weighed under the population for the specified cyclic billing period. This estimate is based on the company's forecast of log deliveries from all sources. It requires:

- company's proposed stratification along with definition of proposed strata (composition by species/grade, stumpage level, others),
- number of loads under each stratum,
- estimated volume for each stratum, and
- estimated standard deviation for each stratum (based on historical or similar stratum).

The sampling plan must be approved by the ministry. In finalizing the sampling plan, the ministry may request the scale holder to re-submit the sampling plan with additional information to HBS prior to approval. The population holder should notify the ministry contact once they have proposed a plan in HBS.

Responsibility for Reliable Production Forecasts:

The weight scale holder has sole responsibility for a reliable sampling plan and is also responsible for ensuring the ministry is advised, as soon as possible, of any changes to the forecast during the year.

14.1.2 PSY

Each population and stratum must carry a unique eight digit identity called the PSY.

POPULATION	STRATUM	YEAR
4 digits	2 digits	2 digits

The population field is linked to a region and district. This identity is an essential part of all data collected under the weight scale system.

14.1.3 Setting the Sampling Objectives

14.1.3.1 Sampling Objectives

The primary objective of sampling is to satisfy the data needs of the ministry. Secondary to these needs are those of the weight scale holders. General ministry data needs include:

- volumes by species, grade, and timber mark for stumpage billing, and stumpage appraisals, and
- volumes by grade for cut control.

The scale holder's data needs may vary from ministry requirements but both can be accommodated through judicious stratification.

14.1.3.2 Precision Requirements

Currently, the only precision requirement for weight scaling is set under the *Scaling Regulation.*

Precision is set at the sampling plan level as ±1% at the 95% confidence interval.

> **What does this mean?**
>
> This requires that we must sample the population to ensure there is a 95% probability the total volume we estimate for the population will be within ± 1% of the actual volume.

While there are no precision requirements set on a stratum basis by regulation, they may be required at the discretion of the ministry. Working within the confines of the 1% population objective and defining some stratum objectives enables sampling to be focused on strata where greater precision may be desirable. Similarly, it enables sampling to be relaxed where data needs can be fulfilled with lower precision such as

strata comprised of salvage timber appraised at minimum stumpage rates, or private timber.

14.1.4 Stratification to Meet the Sampling Objectives

14.1.4.1 Why We Stratify

As defined in the preceding chapter, stratification is the grouping of components of the population on the basis of similarity of one or more characteristics (species, similar value, grade, timber mark, volume to weight ratio, utilization level).

Under weight scaling, stratification serves two objectives:

1. Reduces sampling costs by reducing the overall sample size.

2. Specifies the sample size in a particular stratum in order to achieve better efficiency.

In the earlier days of weight scaling with low stumpage rates, little grading in the Interior and little differences between stumpage rates, the first objective of reducing the sampling requirement prevailed. With higher stumpage rates, an Interior grading system introduced in the late 1980s, more complex log marketing arrangements, and growth of the small business sector, stratification is expected to serve both objectives. This is the challenge of stratification.

> **Objectives of Weight Scale Stratification**
>
> Group units into strata that provide better precision at the population level or to provide efficiency, operational or special data requirements at an acceptable sampling cost.

14.1.4.2 How are the Objectives of Stratification Met

14.1.4.2.1 Reducing the Sample Size

The simple relationship between the sample size, the standard deviation, and the sampling error provide some insight into why we stratify and also what happens to the sample size (n) with changes in the standard deviation (SD) and the sampling error (SE).

> This is a shortened functional equation suitable only for conceptual purposes.

$$SE = \frac{SD}{\sqrt{n}} \text{ or } n = \left(\frac{SD}{SE}\right)2$$

From this simple relationship, one can see:

1. n (the sample size) increases with a larger standard deviation and decreases with a smaller standard deviation. If the standard deviation doubles, it requires four times the sample size for the same quality result, so it is very important that the number here be realistic.

2. SE (the sampling error) rises with a larger standard deviation and lowers as more samples are taken.

Following these relationships, one can appreciate how the objectives of stratification can be realized (grouping of components of the population with similar traits may reduce the variance between units within that group and thereby reduce the standard deviation. This may in turn reduce the SE or require fewer samples to meet the same SE objective).

Weight scale statistics revolve around the relationship between the scaled volume and the weight (the ratio). As such, the standard deviation is reduced only where you stratify the population into strata that have similar ratios.

To minimize the standard deviations requires an understanding of factors that impact the ratios. These factors may vary considerably from population to population, and are best understood through experience. Common factors include:

1. Species: wood density varies by species, with red cedar wood significantly lighter and hemlock wood significantly heavier than average.

2. Growth rate: fast grown coniferous trees on good sites (lower elevation, fertile, moist, warm) are heavier than slower grown trees of the same species on poorer sites (higher elevation, infertile, dry or water logged, cold).

3. Age: young trees with a high proportion of sapwood are heavier than older trees with a smaller proportion of sapwood. Similarly, wood density varies by location in each tree.

4. Moisture content: a tree stem starts to lose moisture after it is dead and such moisture loss decreases the mass. The rate of loss is greater in dry weather than in wet weather. Logs from fire, or insect killed trees are usually light, as are logs left decked for any length of time.

5. Defect: defect volumes are excluded from the scale and defect in a log will decrease the volume/weight ratio.

6. Foreign matter: dirt, ice and snow are often weighed with the load and decrease the volume/mass ratio.

7. Utilization level: different utilization levels in the same stand will yield a different grade profile arriving at the scale and as such will result in different ratios.

Exclusive recognition of only these factors in preparation of the sampling plan coupled with local knowledge will likely optimize sampling costs but may not satisfy other important data needs.

14.1.4.2.2 Providing More Meaningful Answers

The most important role played by stratification is in providing more meaningful information for data users. This includes ensuring the data needs for billing stumpage, cut control, and stumpage reappraisals are satisfied.

These objectives are partially met through stratification by:

- Clear and restrictive definition of loads going into each stratum, and
- Assigning precision levels for certain strata.
- Designing stratum to take advantage of the Harvest Billing System reporting structure (rather than processing the data by hand or with another computing system).

14.1.4.2.3 Stratum Definition

The principal means of ensuring data are meaningful and reflect user needs is through clearly defining each stratum. The Stratum Definition prescribes the makeup of loads that may be included under a given stratum. Through this definition, one is able to ensure loads within a stratum have similar traits. The specific definition is predicated by the traits that the stratum should reflect. For example, the definition for a No. 1 Sawlog stratum would likely prescribe a mandatory percent of No. 1 sawlogs in each load, such as a 90% requirement (stratum 1 = all loads having greater than a 90% No. 1 sawlog content). For data processing conventions, strata are identified by a 2-digit numeric field and a 16-digit descriptive field.

14.1.4.2.4 Factors Limiting the Stratum Definition

Stratum definitions may be limited and influenced by a number of considerations:

The ability to sort logs prior to transport:

Sorting of logs on the cutblock prior to loading provides the ability to control the content of each truckload being weighed. It minimizes the variation of the ratio between loads in each stratum and enables more correct stratification of loads. Logs can be sorted on the basis of traits the loader operator can readily observe and physically handle. Usual traits include: species content, log size and to a more limited extent, log condition with the latter confined to differentiating dry from green logs, pulp from sawlogs, or sorting out low grade salvage logs.

While sorting is beneficial from a weight scaling perspective, it is not always feasible from operational or forest site management perspectives.

Where timber is not sorted or sorting is restricted, a few guidelines should be followed:

- stratification plans where strata are assigned according to timber mark are the most reliable in terms of ensuring loads are assigned to the correct stratum,
- where strata definitions refer to species content, the percent requirements should facilitate the stratum decision and avoid overlap,
- that sorting may be difficult in the bush but dry timber should not ordinarily be mixed with green timber.

> Good stratification depends on the ability of the loader operator to sort, or timber weigher to classify loads according to desired stratum definitions.

Classifying loads where logs are not sorted prior to transport means the ability to control the content of each truckload is impaired. The correct classification is dependent upon the knowledge and good judgement of the loader operator and the timber weigher. While the loader operator, if adequately trained, may have knowledge of the content of each load, the timber weigher is confronted with a limited view of the external log sides and ends. As such, it is unreasonable to expect the timber weigher to know what is inside the load.

The production forecast:

To include any stratum under the sampling plan requires an estimate of the total number of loads in that stratum along with an average load size and a standard deviation for the stratum. While standard deviations can usually be approximated from previous sampling experience, to be meaningful, the production forecast relies on the ability to differentiate the population into the qualities reflected by the stratification. For example, if you wish to stratify on the basis of timber mark, you will require an estimate of truckloads expected for each mark. Other approaches, such as stratifying by grade profile or species composition may require more difficult estimates. If reliable forecasts cannot be made about a stratum, the stratum should be avoided and that material considered for inclusion in another stratum or strata.

> Poor production forecasts are the chief cause of under or over sampling.

Small strata are particularly dependent upon reliable production forecasts. Because the statistics underlying the calculation of sample size require at least 10 samples to be reliable, over estimated strata volumes will result in poor precision, and in unreliable statistics about that precision.

Similarly, while the minimum number of samples for the purposes of calculating the standard deviation is 10, highly variable strata will require more than 10 samples to achieve acceptable precision. As such, if the anticipated number of loads is small, the benefit of better information may be outweighed by the costs of sampling and the risk of unsatisfactory results.

The exception is for a small stratum of 200 loads or less, where the sample floor can be set at 5 or 5% of the estimated number of loads for the stratum, whichever is greater. If the number of samples required is greater than 9 then the stratum is treated as if requiring at least 10 samples.

14.1.4.2.5 Assigning Precision Levels for Certain Strata

For some strata such as those containing high value species, high value marks, salvage material, or other traits, it may be in the interest of the user to know that the volume within that stratum was sampled to a given precision.

The objective of sampling for any given stratum may therefore be: to estimate volumes for loads of timber with predefined traits to a set level of precision. At the end of sampling a statement can be made that the total volume of loads of predefined traits was sampled to a given precision (e.g., the volume under Stratum 1 comprised of Douglas-fir and lodgepole pine loads, all grades were sampled to a 2.5% precision).

14.1.4.3 Common Stratification Methods

To meet the varying objectives of data users, the sampling plan may include one or more stratification methods. The following are examples of stratification but are not restricted to:

14.1.4.3.1 Stratification by Species

Under this approach, stratum definitions may include single species where timber is sorted, a specified minimum species content by load or groupings of species, which exhibit similar densities, stumpage value, or other characteristics.

Stratum 01	-	SP/LO	-	SP, LO with maximum 10% other species,
Stratum 02	-	SP	-	minimum 90% SP by volume.

14.1.4.3.2 Stratification by Stumpage Value

Several approaches are available:

1. Grouping timber from marks with similar stumpage value under the same stratum:

   Stratum 03 - High Value - A099, YK02, 32/9.

2. Specifying strata by species and/or grade composition. If the objective is to better account for high value sawlogs, the stratum definition could include a minimal level of sawlog content or a maximum tolerance of lower grades. Similarly, low value timber can be handled in the same way:

   Stratum 04 - CY S/L - minimum 90% X & better.

14.1.4.3.3 Stratification by Season

Where the ratio for a given stratum varies significantly from season to season ($\geq$ 20%) it may be beneficial to divide the stratum into two parts (07 = Season A, 08 = Season B).

14.1.4.3.4 Stratification by Timber Mark

It may be feasible to assign separate strata to single timber marks where the timber profile is not similar in other strata or it is desirable to assign precision against a single timber mark. The forecasted production for the stratum may be a limiting factor:

Stratum 05 - 39/2.

14.1.4.3.5 Stratification by Tenure Type

If an objective is to account for the total volume of all marks under a class of tenure to a pre-set precision, all marks under that tenure can be included under a single stratum:

Stratum 09 - Purchase Strata - all purchase marks.

14.1.4.3.6 Stratification by Quality of Timber

Under this approach, timber of similar quality, such as sawlogs, insect damaged or fire killed timber, salvaged volumes, or low grade timber can be included under a single stratum:

Stratum 10 - Fire Kill - 100% dry,

Stratum 11 - Fir S/L - 90% fir, no more than 5% non No. 1 and 2 grades.

> The keys to effective stratification are a meaningful and reasonable production forecast and experience. Experience is gained mostly through monitoring sampling results.

Because sampling is in place to serve different objectives, the final sampling plan may provide for several methods of stratification. It should also be clearly understood by all weight scale users that the final stratification strategy will not likely satisfy all objectives for all data users. The section about monitoring sampling results will discuss this aspect in further detail.

14.1.5 Determining and Allocating the Sample Size

This is the final stage of preparing the sampling plan and consists of merging the production forecast with the stratification proposal, finalizing sampling objectives, determining sampling frequencies and entering the plan on the Harvest Billing System (HBS). Most of these functions are carried out by the planner segment of the Stratum Advisor Program on HBS.

Stratum Advisor is a tool used by industry and ministry personnel to create and monitor sampling plans. Sample Plan Administrators will use Stratum Advisor to determine optimum precision and sampling objectives for a population by:

- creating a sampling plan using estimated production levels,
- monitoring the sampling plan, and
- adjusting the sampling plan as required and adjusting the sampling plan to statistical data.

While only a Sample Plan Administrator can create or modify a sampling plan, all users (including the public) can use Stratum Advisor to view sampling plans.

The program is interactive, enabling the user to make different assumptions, set varying precision objectives, and adjust the sample size before finalizing the sampling plan.

Basic functions of Stratum Advisor include:

- entry of data from the production forecast, and statistical data,
- calculating optimum or unconstrained sample sizes and precisions,
- setting sample size and/or precision constraints, and
- calculating the final precision and sample size targets.

For a description of the data fields and instructions on how to use the program refer to the HBS Reference Guide for Industry at:

http://www.for.gov.bc.ca/hva/hbs/HBSIndustryRefGuide.pdf

Following entry of the data, the Stratum Advisor calculates the optimum or unrestricted sample sizes and precision for each stratum. This calculation always supports a 1% precision requirement at the population level.

> Because the Sampling Plan (Population) Precision Standard is set by regulation at 1%, all calculations in the planner support a 1% precision level for the plan. However, to assist in evaluating the impact of different sampling models, the precision for the population can be adjusted to values that are greater than or less than 1%.

The allocation of samples is based on the standard deviation of each stratum relative to all other strata. As such, those strata with the highest standard deviation will demand the most intensive sampling.

The optimum allocation represents a calculation based strictly on the production estimates.

Because data users may wish to achieve better sampling results in some strata (high value timber) or be willing to accept poorer results in other strata (perhaps low value salvage timber) the planner enables the user to constrain the calculations. Two options are available:

1. constrain precision, and

2. constrain the sample size.

Constraining precision enables the user to set the precision objective for one or more strata. Where precision on a stratum is set, the program re-allocates sampling effort to all other strata, while at the same time ensuring the 1% sampling error objective for the population is maintained.

Similarly, constraining the sample size enables the user to increase or decrease the sample size for one or more strata. As in the event of setting precision levels, setting the sample size sees a reallocation of samples to ensure the 1% population objective is met.

To calculate the required number of samples (the sample size) and expected precision for any stratum requires estimates of the total number of loads, the average load size (m3) and an estimate of the standard deviation. While the volume estimate (total loads times average load size) is taken directly from the production forecast, the standard deviation requires more judgement to estimate. If the same stratum was sampled in the previous year, the experienced standard deviation may simply be inserted in the new plan. If there is no sampling history in the stratum you may wish to borrow one from similar strata in

the same or a different population. Failing any similar strata, you will have to use your best judgement in estimating a representative standard deviation. After setting any precision and/or sample size constraints, the final precision and sample size targets are calculated. These are reviewed and further modifications to the production estimates or constraints may be made before finalizing the sample plan.

It should, similarly, be noted that weight scale calculations revolve around the ratio and reflect statistics about stratum and population volumes. In realizing its sampling objectives, they may require additional samples to better account for other characteristics such as timber mark, species, and grade. In all cases, approval of the final sampling plan rests with the ministry.

14.1.5.1 Subsampling

The incentive for subsampling lies in the logistics of measuring and recording every piece where there are large numbers of pieces. This applies to full bunks on logging trucks carrying short logs. Under controlled circumstances subsampling is a statistically valid sampling approach. Under some conditions it may be authorized for scaling by the Ministry of Forests and Range.

Scaling conditions where subsampling may be considered for authorization include:

- each bunk is treated as a load or unit to be sampled, and
- where every bunk has an equal opportunity of being selected as a sample.

Where these conditions cannot be assured, subsampling will not be considered.

Regional and District Staff will authorize and set conditions.

14.1.6 Selecting and Processing Samples

Subsequent to approving the sampling plan and in advance of weight scale production, the Ministry of Forests and Range is responsible for programming the initial sampling frequencies into the sampling selection portion of the scale holder's weight scale computer. Weight scale computers and sample selection routines must conform to standards set by the Ministry of Forests and Range.

Loads selected as samples must be scaled by the scale holder in accordance with the scale site authorization issued for the scale site. The scale details for each sample scaled must be submitted to the ministry in the approved electronic format or on an FS 1217 scaling form.

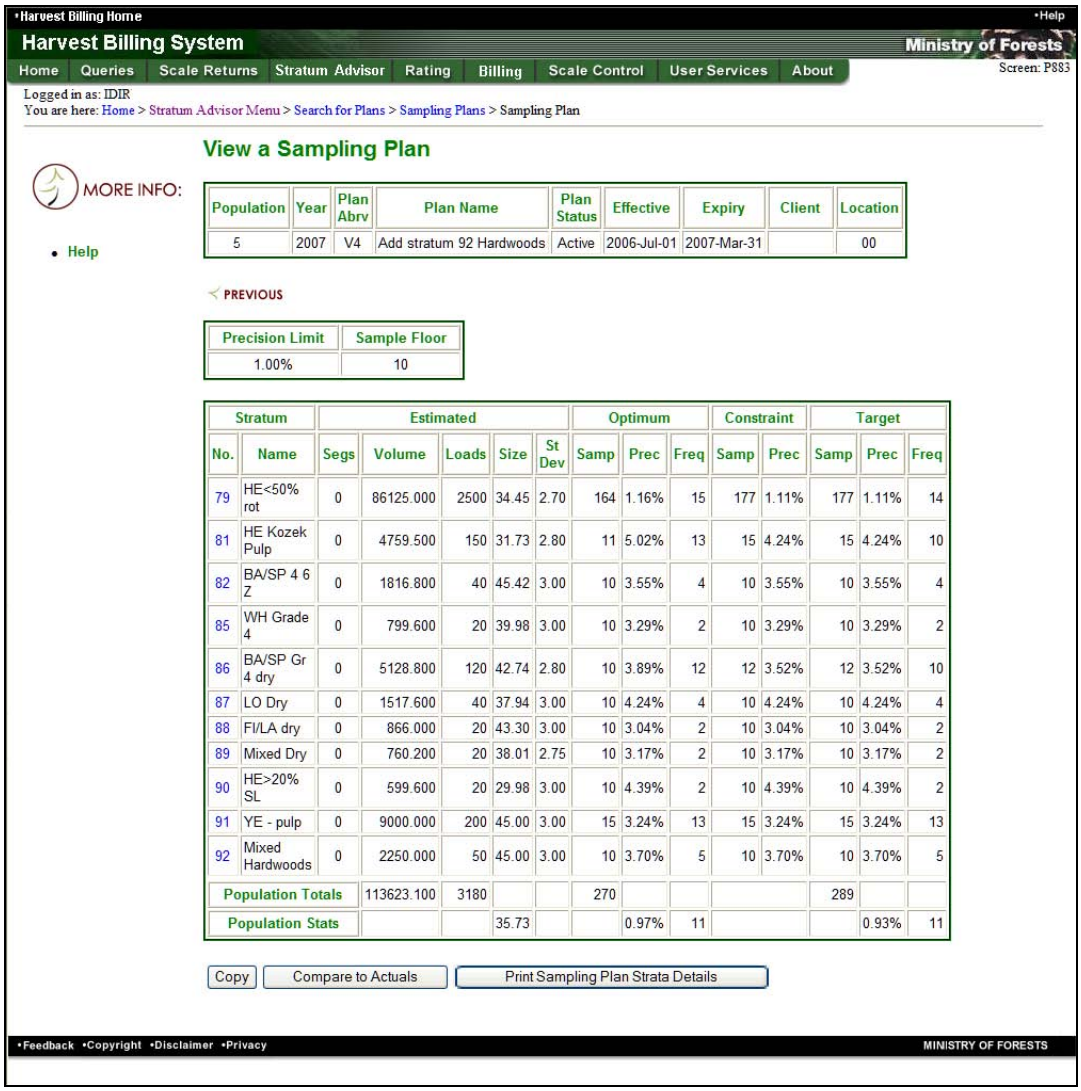

Population	Year	Plan Abrv	Plan Name	Plan Status	Effective	Expiry	Client	Location
5	2007	V4	Add stratum 92 Hardwoods	Active	2006-Jul-01	2007-Mar-31		00

Precision Limit	Sample Floor
1.00%	10

Stratum		Estimated					Optimum			Constraint		Target		
No.	Name	Segs	Volume	Loads	Size	St Dev	Samp	Prec	Freq	Samp	Prec	Samp	Prec	Freq
79	HE<50% rot	0	86125.000	2500	34.45	2.70	164	1.16%	15	177	1.11%	177	1.11%	14
81	HE Kozek Pulp	0	4759.500	150	31.73	2.80	11	5.02%	13	15	4.24%	15	4.24%	10
82	BA/SP 4 6 Z	0	1816.800	40	45.42	3.00	10	3.55%	4	10	3.55%	10	3.55%	4
85	WH Grade 4	0	799.600	20	39.98	3.00	10	3.29%	2	10	3.29%	10	3.29%	2
86	BA/SP Gr 4 dry	0	5128.800	120	42.74	2.80	10	3.89%	12	12	3.52%	12	3.52%	10
87	LO Dry	0	1517.600	40	37.94	3.00	10	4.24%	4	10	4.24%	10	4.24%	4
88	FI/LA dry	0	866.000	20	43.30	3.00	10	3.04%	2	10	3.04%	10	3.04%	2
89	Mixed Dry	0	760.200	20	38.01	2.75	10	3.17%	2	10	3.17%	10	3.17%	2
90	HE>20% SL	0	599.600	20	29.98	3.00	10	4.39%	2	10	4.39%	10	4.39%	2
91	YE - pulp	0	9000.000	200	45.00	3.00	15	3.24%	13	15	3.24%	15	3.24%	13
92	Mixed Hardwoods	0	2250.000	50	45.00	3.00	10	3.70%	5	10	3.70%	10	3.70%	5
Population Totals			113623.100	3180			270					289		
Population Stats					35.73			0.97%	11				0.93%	11

Figure 14.1 An Approved and Active Sampling Plan as Shown in HBS Stratum Advisor.

14.2 Monitoring Sampling Plan Progress and Weight Scale Results

With cyclic billing, sampling results are not finalized until the year end and therefore, ongoing monitoring is required to achieve satisfactory year end results. Monitoring involves periodic review of data reports and assessment of the sampling plan. Monitoring may result in periodic changes to the estimates contained in the sampling plan and/or the stratification itself.

Monitoring during the year is a periodic function and not to be confused with sample data checks, which are routine. It should always be remembered, some data may not have an adequate sample size until several months into the sampling year. Effective monitoring of the sample plan requires that some basic questions be answered on an ongoing basis during the sampling year and at year-end. Some of the questions which may be answered by the data include:

14.2.1 During the Sampling Year

- Are sample loads being correctly stratified? For example, stratum 31 calls for at least 80% lodge pole pine, it is currently 80.4%.
- How frequently are sample loads being deleted? The importance of this question lies in the principle that true random sampling is satisfied only when all loads have an equal opportunity of being selected as samples. Cancellation interfers with this principle.
- Are there any trends in the data?
- How much do the sampling results compare with those assumed in the sample plan? (compare standard deviations if you have enough samples, compare load averages), and
- If current trends continue, will you be meeting your sampling objectives, will you get enough samples in each stratum, and will your production estimates be met?

14.2.2 At Year-end

In addition to the above, at year-end, you can also answer some very basic questions:

- Did you meet your sampling objectives?
- Could you have achieved the same results with fewer samples?
- What were your actual standard deviations in each stratum?
- How good were the production estimates?
- How effective was your stratification scheme?

Year end results provide the most accurate data about the population and provide the best information available for the next sampling plan if you conclude the wood profile for any given stratum will be the same in the next year.

Data usually taken from the year end report and used for entry into the next sampling plan include:

1. Strata standard deviations, and

2. Average load size.

Because the final year end calculation is not available until after commencement of the new cyclic billing period, it is necessary to borrow year end data from the most recent available report for use in the new sampling. This does not represent a problem unless there are inadequate samples (less than 10) in a stratum to calculate a reliable standard deviation. Ultimately, good judgement tempered with experience must be used.

HBS Stratum Advisor data is an effective tool for monitoring sampling progress. Drawing any conclusions from it, however, requires a clear understanding of what data is included in the report and what is the significance of each data field.

In reviewing this data, the following should be observed:

- Precision at the stratum level means: there is a 95% probability (or 95% of the time) the total volume calculated for the stratum will be within the precision percent of the actual volume.

- The standard deviation for the stratum: this is a measure of how much truck to truck ratios vary within each stratum. It is reported in cubic metres so strata can be compared. If Stratum A has a standard deviation of 1.5 m3 compared to 6.5 m3 for stratum B, we can conclude stratum B is much more variable than A. One of the underlying objectives of stratification is to minimize the variation between loads in the same stratum and thereby meet sampling objectives with fewer samples. In this case, if strata A and B had the same number of truckloads in them, the more variable situation (Stratum B) would require much more intensive sampling than stratum A to achieve the same sampling objective. This standard deviation is used in calculation precision at the stratum level as well as being used in the next years's sampling plan to calculate the sample size.

- Sampled Loads - This is the number of samples taken to date for each stratum.

- Precision Within a Stratum - This precision percent means there is a 95% probability the volume estimated for the species grade combination is within some percent of the actual volume for that species grade combination.

It must be understood by all users that the basis for calculating precisions at the species grade level is not accurate and the resultant precision is an approximation only. The approximation may be reasonable for species grade combinations comprising a high percentage of the stratum volume. The reliability of the approximation however, erodes very quickly as the species-volume declines. Precision percent calculated for species-grade combinations comprising less than 10% of the total stratum volumes must be viewed as unreliable.

Ratio detail should also be reviewed to pinpoint possible data problems. Generally, ratios varying by more than 25% from the average ratio for the stratum should be reviewed very closely for errors.

14.3 Managing the Sampling Plan

An accurate, well balanced sample plan is critical to obtaining efficient weight scale data. As per the Scaling Regulation a precision of ±1.0% @ 2 SE is required for every sampling plan for which a weighing and sampling method of scaling is agreed to between the ministry, the population holder and the scale site operator. That means the sampling plan must be sampled intensively enough to generate a volume estimate within ±1.0%, 19 times out of 20, of the actual volume that would have resulted had every piece of timber in the population been individually scaled. Very large amounts of direct revenue are generated by even a relatively small population and care must be taken to ensure that the calculation of the timber volumes is as fair and equitable as possible to both the Crown and the industry. In addition, the scale volumes generated by a sample plan may be used as the basis of trade between buyers and vendors. The methodology of arriving at those volumes must be unbiased and statistically defensible.

14.3.1 Management Responsibility

Maintenance of accurate data and a defensible sampling plan is the responsibility of both the ministry and the population holder. The initial responsibility rests with the population holder, who must ensure the best possible estimate is made of the coming year's production and that a well-planned stratification strategy is prepared. Consultation with company woodland's managers and log buyers, reviews of previous year's sampling results, and ongoing consultation with the ministry's scaling staff will go a long way toward achieving this goal. The ministry's scaling staff is responsible for ensuring that sampling plans are carefully evaluated, compared with the operator's previous year's results, before a plan is approved for implementation. The ministry may reject the plan if objectives are not met.

Once the plan is in place, it becomes the responsibility of both parties to continuously monitor the interim results. It is the duty of the population holder to make the best possible estimate of timber production and profile for the coming year. During the course of the sample year, should unforeseen problems, arising from weather, markets, or other constraints beyond the control of the holder, create significant changes in the projected population size or the strata profile, the holder must inform the ministry scaling staff. A joint review of the changes can then be carried out and a decision reached on how (or if) the sample plan will be revised to reflect the changes. Guidelines for evaluating the effect of production changes and how to proceed are covered in the following sections.

14.3.2 Revising the Sampling Plan

Where it becomes very clear the production forecast and other assumptions underlying the sampling plan are not being realized it may be necessary to revise the sampling plan during the year. While changes to the sampling plan are the subject of frequent debate, the decision to change or not change a plan must be made in strict compliance with two basic statistical principles.

1. Random Sampling - as discussed in the previous section on statistics underlying the weight scaling, samples must be drawn at random. A random sample is a sample drawn in such a way that all loads in the stratum (every truckload) have an equal chance of being selected as a sample. If random sampling is not satisfied, biased results may occur.

2. Representative Sampling - samples must be representative of the population (in this instance, the stratum) from which they are drawn. A representative sample is one in which the sampled loads fairly reflect the stratum. For example, if the stratum definition calls for 95% sawlog grade and up to 5% other grades, then a representative sample is one which contains at least 95% sawlogs and the balance in other grades. Random Sampling somewhat ensures samples are representative. There are, however, unavoidable instances where sampling may not be strictly random. In this case, ensuring that samples are representative should be sufficient to maintain integrity of the Weight Scale results.

To ensure representative sampling, you must ensure loads are correctly accounted for under the stratum definition.

> Changes to the sampling plan should be made only where you are satisfied that the above basic statistical principles will be complied with.

14.3.3 Sample Plan Revisions

How (or whether) one amends a sample plan will depend on how severe the production changes are going to be and whether they are consistent across all strata, much greater in some strata than others, involve decreases, increases, introduction of entirely new species, grades or mixes, or even new strata. The impact of changes can also hinge on the time period over which the timber involved is expected to be delivered.

For example, wood tends to be heavier in spring than in autumn, because there is more sap present. This is especially true of younger trees and can result in noticeably different volume/weight ratios, depending on when the timber was cut. The change is not so dramatic for mature or over-mature timber. Winter-cut timber, on the other hand, can also generate lower ratios; not because of the wood itself, but because large amounts of mud, ice and snow can stick to the load and add to the gross weight of the truck, while contributing nothing to payload volume.

14.3.4 Options

When production estimate amendments are large enough to warrant revisions to the sample plan, there are several possible approaches, and numerous combinations of those approaches, that can be used:

1. Close off existing strata and start new ones.

2. Combine strata (if the sampling frequency was the same in each stratum),

3. Make no changes.

In order to give some general guidance on what approach to take, a simplified, hypothetical example of a sample plan, descriptions of some changes that can occur and possible remedies for each situation follows.

Example of a Hypothetical Sample Plan

Stratum	Prod. Estimate	Samples Required	Sample Frequency
01	5 000 loads	100	1/50
02	1 000 loads	50	1/20
03	200 loads	10	1/20
Totals:	6 200 loads	160	

Halfway through the sample year, circumstances force a major change to production by stratum. Projected volume in stratum 01 drops to 2 500 loads, increases to 2 500 loads in stratum 02, and in stratum 03 drops to only 50 loads. With no change to sample frequency, the revised production estimate will now generate the following:

Stratum	New Prod. Est.	Sample Frequency	Potential Samples
01	2 500 loads	1/50	50
02	2 500 loads	1/20	125
03	50 loads	1/20	2 (or 3)
Totals:	5 050 loads		177

This is a good time to try some "what-if" recalculations of the sample plan, based on the revised volumes and the best statistical data available. The Sample Planner/Advisor software is ideally suited to this application. You may want to try several scenarios before settling on one, bearing in mind that at least +1.0% @ 2 S. E. precision for the population is still the objective. Species/grade profiles and overall ratio values of each stratum can also be analyzed, especially if one is considering strata amalgamation. As well, consider how significantly seasonal variations in ratios may affect sampling. Let us assume that revised production estimates, current standard deviations, and average load sizes are such that when you calculate a revised sample plan, the number of samples needed for the population remains at "160", and the new distribution of samples by stratum for the scenario you select is:

(Revised Plan)

Stratum	Samples Required	Current Potential Samples
01	75	50
02	75	123
03	10	2 (or 3)
Totals:	160	177

Proportional distribution now requires that stratum 01 and 02 have 75 samples each. The minor stratum, 03, we decide to leave at 10 samples. If the sampling plan does not change, revised production will generate 17 more samples than needed, even though overall production has dropped by almost 20%. At the same time, sampling by stratum has become unbalanced. Though strata 01 and 02 are now the same size, 01 will only generate 50 samples, while 02 will generate 125. Stratum 03, on the other hand, will only have 2 (or maybe 3) samples, well short of the minimum of 10. Some possible remedies are as follows.

14.3.4.1 Stratum 01

1. Depending on production to date, one possibility may be to close the current stratum 01 and start an entirely new stratum with a tighter sampling frequency. If, for example, 750 loads had already been received in stratum 01 and 15 samples generated, and a recalculation of the plan indicated 15 samples were sufficient for the 750 loads received to date, it would be in order to shut the stratum down and start an entirely new one to receive the remaining 1 750 loads expected.

2. Another option may be to simply accept the sampling shortfall. However, this should only be considered if the quality/value of the timber going into stratum 01 is very low. If purchase timber is put through this stratum, deliberate under-sampling is not a recommended option.

14.3.4.2 Stratum 02

1. As with stratum 01, closing the stratum off and starting a new one could be an acceptable option if production and sampling to date would make it a viable "stand-alone" stratum. Sampling frequency in the new stratum could then be reduced to where a more reasonable quantity of samples would be generated.

2. If this option is not viable, the most favourable approach would be to simply accept the over-sampling. It is not a perfect solution as it will cause some additional sampling cost and will not result in the best-balanced sampling plan, but it will at least ensure defensible sampling for the stratum. This is especially important if the stratum will be used for scaling purchase timber.

14.3.4.3 Stratum 03

1. The stratum is too small to consider closing it off and starting a new one with a reduced sampling frequency.

2. Though it should not be done without first running the data through the HBS Stratum Advisor program, amalgamating stratum 03 with strata 01 or 02 may be an acceptable solution, providing the species/grade profiles are reasonably similar. This would involve combining the past data from strata 02 and 03, and changing the definition of stratum 02 (which had the same sampling frequency as stratum 03) to allow loads from both types to go into stratum 02 in the future.

3. If none of the above options seem advisable, you can consider leaving the stratum as it is. However, unless it is a very low value stratum, which will only be used by the population holder, this is not a recommended option.

If neither options 2 or 3 seem viable, then the best remaining solution will be to accept the higher sampling error in that stratum.

14.3.5 Sampling Plan Amendments

One possible production change that has not yet been discussed is the new stratum, or strata added onto a sampling plan that is already in place. Usually, these are not major strata, do not often require more than the minimum number of samples (10), and will not likely have a significant impact on the rest of the sampling plan. However, if an "added-in" stratum should be large enough to upset the proportional distribution of samples throughout the rest of the population's strata, the possible remedies remain the same as those presented under 'options'.

14.3.6 Standard Deviations

Standard deviations (SD) are one variable that can have a profound effect on sampling requirements without any change to production estimates. These are the mathematical expressions of how widely volume/weight ratios vary from sample to sample. For example, if the variance of ratios in even one stratum (especially a major one) begins to significantly increase, it will not only affect that stratum, but can effect the entire population and thereby require additional samples be taken for all strata. Equally, if the SD of a major stratum should drop, the reverse will occur.

Any number of conditions can contribute to variances between the SDs used to initially calculate a sampling plan, and those actually generated as samples are collected. Seasonal variations and mixing of dry and green timber in the same stratum are the two most common ones, but ratios can also be affected by errors in scaling, data recording and key punching. The best place to check for unusual changes to SDs is in sample summaries. If you encounter one or more samples with ratios that significantly deviate from historical or anticipated ratios, those samples should be carefully examined and any errors that are found corrected.

Whether or not to amend a sampling plan because of unexpected changes to SDs, will depend on how dramatically they alter sampling requirements. As a general rule, if sampling requirements drop because SDs are lower than expected, it is probably best to leave the plan as it is. If SDs increase to the point where one or more strata, or the entire population will fall short of the sampling target, a careful review of potential changes, as discussed under 'Options', will need to be made.

The options of "*closing off existing strata and starting new ones*", or "*making no changes*", are the most likely ones to consider. It is doubtful that "*amalgamating strata*", would be of much benefit in such a case.

> Your best sampling results will be achieved if you comply with basic statistical principles, if you learn from previous sampling results and if you use your best judgement!

14.4 Operational Procedures to Ensure Sampling Plan Integrity

All timber weighers, sample scalers, and site owners/operators are responsible for conducting operations in accordance with all the conditions of the scale site authorization letter. Timber weighers and scalers must also be fully conversant with, and abide by, all the conditions stated in their scaler/weigher authorization letters. If any of these conditions need clarifying, the District Scaling Supervisor or Check Scaler will be pleased to discuss them with you.

14.4.1 Inspecting Loads Before Weighing

Timber weighers are responsible for inspecting every load of timber arriving at their weigh scale. As each load arrives, the weigher must personally examine it to ensure that:

- all wheels of the truck are fully on the platform,
- the timber marks or brands have been applied in the manner required by the Forest Service, and
- the trucker has presented the necessary load documentation (FS 649 or equivalent) to indicate whether the load is unscaled or previously scaled.

During the inspection, take note of the species and grade make-up of the load so it can be assigned to the correct stratum. Depending on the conditions in the scale site authorization letter, it may also be a requirement to affix identifying tags at this time. If unsure, discuss with the local District Scaling Staff.

Where problems are found with either timber marking or load documentation, immediately contact the District Scaling Supervisor and ask for direction on how to deal with the matter. If the scale operates outside normal working hours or on weekends, ministry staff will not always be available. In those cases, arrangements to deal with such matters should be made ahead of time between the Scaling Supervisor and the timber weigher.

14.4.2 Processing the Load

Depending on the status of the timber to be processed, there are a number of different procedures that will be required as explained in the following sections.

14.4.2.1 Previously Scaled Timber

When timber has been scaled previously, it must be appropriately entered: either into the weigh scale computer or onto a FS 1217 (weigh slip) if records are being manually kept. Previously scaled timber may be weighed and/or otherwise recorded as directed by the scale site owner/operator.

14.4.2.2 Unscaled Timber

For unscaled timber, load information is entered into the computer (or onto the FS 1217 and FS 523, if keeping manual records). Minimum required data that will be automatically generated by weigh scale computers are date and time of weighing (in and out) and gross, tare, and net weights. The use of rolling tare is not permitted. Measurement Canada demands an accurate net weight:

> The use of a `rolling tare is not permitted.

Timber weighers must add the balance of information:

a. the timber mark (ensure mark is valid and approved for scaling at your site),

b. the stratum and species,

c. the contractor/trucker name or code, and

d. other information as may be required by the scale site owner/operator.

Ensure that a stable reading can be obtained before recording the gross weight of the truck. If the load has been selected as a sample, refer to the next section for more information. If the species/grade profile of the load is such that it is not suitable for inclusion in any stratum in the sample plan, refer to the section on "Loads not Suitable for the Sample Plan." The vehicle may then proceed to the off-load area.

When the truck has unloaded and picked up its trailer, it must return directly to the scale to obtain a tare weight. To ensure an accurate net weight can be calculated, the vehicle must not take on fuel or water or make any other significant changes to its tare (dropping off tire chains, for example) before the weighing out procedure is completed.

Unless formally agreed to in the scale site authorization letter, round trip distances from point of weighing to the off-load area must not exceed ten kilometres.

Once the weighing process is completed and recorded on the weigh slip or safety sheet the timber weigher must sign the weigh slip. If a safety sheet is not used the copies of the weigh slip are distributed according to the company arrangement including a copy to the Forest Service. Districts will give instructions to the scale sites as to the submission requirements. The daily audit report, safety sheet (if used), weigh slips and other specified documents must be available for auditing by the Forest Service. The data is submitted to the HBS data base according to HBS and Scale Site Authorization requirements.

14.4.3 Managing Sample Loads

If a load has been selected as a sample, the timber weigher must enter it into the sample ledger and it must be noted on the weigh slip and the daily load inventory. Computerized

systems usually perform the last two tasks automatically. It must then be visually identified as sample. This may be done with specially coloured tags and ribbon, or other methods as approved by the District Scaling Supervisor. Once the load has been tagged, direct the truck driver to take it to the sampling area. Samples are usually either immediately spread in the sample yard for scaling or secured with a wrapper before being off-loaded, as it is absolutely critical that no pieces be lost from or added to a sample before it is scaled.

Conditions of scale for sample loads are normally spelled out in the scale site authorization letter and may vary from one location to another. As a general rule, they will cover matters relating to spreading, security, and integrity of sample loads, methods of recording, such as using a ministry approved hand-held scaling computer or FS 1210 form, or equivalent. Other requirements will focus on leaving the last load scaled for check scale, timely scale, and submission of sample tallies, and other conditions that may be included in the scale authorization letter.

14.4.4 Loads Not Suitable for the Sample Plan

Occasionally a truckload of timber will arrive at a weight scale that is not suitable for inclusion in any of the regular strata in the sample plan, because the specie content, grade, timber mark or other characteristic does not conform to any of the strata criteria. Depending on the requirements of the scale site authorization, the load will either be weighed through a special stratum specifically set up for the purpose, or more likely will undergo a process called "red tagging". Red tag loads are specially flagged as directed by the District Scaling Supervisor, to distinguish them from sample loads. As with a sample, each red tag load is to be identified as such on its weigh slips and in the daily load inventory and entered into a ledger. Only the gross weight should appear on the daily load inventory and care must be taken to ensure no net weights from red tag loads are not added in to daily or month-end summaries. Red tag loads are processed as piece scale loads as per instructions from the District Scaling Supervisor. Red tag loads should never be entered on any weight scale summaries, as double billing will result.

Once a red tag load has been properly documented, the trucker can proceed to the off-load area, where the timber will be secured, spread, scaled, and otherwise dealt with in the same manner as a regular sample load. The only real difference is that it will be scaled for billing rather than sampling purposes, and therefore must be recorded on a piece scale tally form such as the FS 1211, or approved electronic equivalent.

A word of caution: should a timber weigher or scaler observe that red tag loads seem to be occurring more than a few times a month; it can be an indication that the existing sample plan is not adequately accommodating the profile of the timber being delivered. The matter should be brought to the attention of the company and the District Scaling Supervisor, as an amendment to the sample plan may be needed.

14.4.5 Importance of Accurate Stratification

Timber bush-sorted to a single species or stratified by timber mark only, is relatively easy to classify. Often, however, that is not the case and possibly the most challenging task a timber weigher faces is the accurate stratification of timber as it arrives at the weigh scale. Light and weather conditions, mud or snow on loads, mixes of species, and/or grades in a truckload only add to the difficulty of evaluating timber for inclusion in the appropriate stratum.

Should subsequent scaling of samples or a check scale indicate they have been assigned to wrong strata; it is the responsibility of both timber weigher and scalers to immediately bring the matter to the attention of the District Scaling Supervisor. Scaling staff will then investigate.

Some stratification criteria depend heavily on the timber weigher's skill and ability to judge species-mix percentages and/or grade composition of a truckload. Should a sample be drawn of such a load and its subsequent hand-scale prove that the weigher miscalled the stratum's species/grade criteria, the load must nonetheless remain in the stratum to which it was originally assigned. Be it rightly or wrongly identified, every sample must be considered representative of the non-sampled portion of the stratum for which was drawn. To second guess and move one to some other apparently more appropriate stratum, can introduce a severe sampling bias and is to be avoided.

On the other hand, any loads that have the wrong information simply as the result of a data entry error or incorrect timber mark must be noted and corrected except the stratum, whenever they are discovered.

Mis-stratification should not occur very often. If it does, it will have been for one or both of the following reasons:

1. The weigher either lacks sufficient skill and experience to accurately assess species and/or grades, or is not taking enough care in viewing and evaluating loads, and/or

2. The stratum definition is too vague or complex to be practicably applied to the timber being sampled.

In this first situation, the problem may be remedied through additional training or supervisory direction, if required. In the second, either the bush sorts or the stratum's definition criteria may need to undergo some adjustment.

14.4.6 Testing of Weight Scales for Accuracy (Eccentricity Test)

Weight scales must conform to the legislation and regulations set by Measurement Canada, a division of Industry Canada.

Regular section tests must be conducted on platform weigh scales. If at all possible, regular tests should also be done on hoist-type scales. Unfortunately, this is not always feasible, as known weights of stable and sufficient mass to do a meaningful test and

equipment powerful enough to move the weights in and out of position, are often not available. In those cases, the only testing that can be done is by technicians when load cells are sent away for regular maintenance and calibration.

The requirements are:

1. The weight scale should be inspected each work day before any loaded trucks are processed, for dirt, debris or ice build-up under and around the platform ends. Arrangements are to be made for the removal of any matter that would inhibit the free movement of the scale deck,

2. Sections tests will be conducted at least once each work day, and a second time if the number of loads exceed 150,

3. The device must be zeroed before conducting the test,

4. The heaviest, shortest wheel-base vehicle available (usually a loader) should be used as a test weight. A test weight of 20% to a maximum of 50% of the scale capacity is recommended,

5. Empty logging trucks must not be used as they are too long. Pick-up trucks should not be used,

6. Each section of the scales will be tested in both directions (sections can be marked for the scale operator),

7. Each weight scale must maintain a ledger in which the results of every section tests are recorded by time, date, signed off by the timber weigher. It must be retained at the scale site for 3 months or as per the site authorization, and available for inspection by a forest officer,

8. A test standards (Weights and Measures Canada Reg. Sec 56) shall be used to calibrate and inspect the scale at least once a year,

9. The scale owner/operator is responsible to arrange for immediate repairs,

10. If the prescribed in-service limits of error is outside the range, the Timber weigher is personally responsible to immediately inform both the District Scaling Supervisor and the weight scale owner/operator (as per the tables below),

    Using the charts below, determine the type of weighing device and the interval that is used (2, 5, 10 or 20 kg.). Determine the test weight that will be used. The number on the left side of the chart tells you how much tolerance is allowed.

11. If the variation exceeds 3 times the tolerance then the scale shall be shut down until it is repaired (as per the tables below).

Table 14-1 Class III HD Weighing Device, In-Service Limits of Error

In-service LOE in terms of the number of verification scale intervals	Verification scale interval			
	2 kg	5 kg	**10 kg**	20 kg
	Load in kg	Load in Kg	**Load in Kg**	Load in kg
1	0-1 000	0-2 500	**0-5 000**	0-10 000
2	> 1 000 – 2 600	> 2 500-6 500	> 5 000 -13 000	> 10 000-26 000
3	> 2 600 – 4 200	> 6500 – 10500	> 13 000 – 21 000	> 26 000 – 42 000
4	> 4 200 – 5 800	> 10 500 – 14 500	> 21 000 – 29 000	> 42 000 – 58 000
For heavier weights LOE = [(L/e) – 500/800] + 1 L: the load or standards used to determine the LOE e: the value of the verification scale interval Source: Measurement Canada, Field Inspection Manual, Non-automatic weighing devices part 4 appendix B				

Table 14-2 Other Classes Weighing Device, In-Service Limits of Error

Column I Limits of Error	Column II			
	Class I	Class II	Class III	Class IIII
+ 1 e (2, 5,10 ,20 kg)	0 -50 000	0 – 5 000	0-500	0 - 50
+ 2 e (4, 10, 20, 40 kg)	50 000 – 200 000	5 000 – 20 000	500 – 2 000	50 - 200
+ 3 e (6, 15, 30, 60 kg)	> 200 000	20 000 – 100 000	2 000 – 4 000	200 – 400
+ 5 e (10, 25, 50, 100 kg)	----------	----------	4 000 – 10 000	400 – 1 200
Source: Measurement Canada, Field Inspection Manual, Non-automatic weighing devices, order establishing specifications relating to non-automatic weighing devices part 3 Appendix B.				

An example of using the charts to determine the limit of tolerance:

A class IIIHD weighing device has 10 kg intervals. Using a test weight of 25 000 kg. The chart shows that four intervals are allowed or 40 kg. If the variation is more than 120 kg, or three times that tolerance, the device must be shut down and the emergency procedures initiated.

14.4.7 Records Management at a Weight Scale

Scale Return Electronic Submission

As per the requirements of Section 97 (1) (f) of the Forest Act, Weight Slip and Log Tally data shall be transmitted as specified by the Ministry of Forests and Range Harvest Billing System.

Document Submission

Load Description Slips shall be stapled in chronological order to the associated Daily Audit Report. The original Daily Audit Reports shall be submitted in chronological order to the Ministry of Forests and Range at mid-month and at month end as directed in the scale site authorization.

Document Retention

1. **Daily Audit Report:** print daily, immediately after all weight scale load slips have been digitally signed, and retain a copy for 3 months.

2. **Safety Sheet or Substitute:** to be retained for 3 months, or, the gross truck weight shall be recorded on the Load Description Slip at the time of gross weighing.

3. **Weight Scale Submitted Load Slips Backup (or Backup Report):** retain for 2 years in paper or electronic format.

4. **Submitted Log Tally Backup:** retain for 2 years in paper or electronic format.

5. **Species/Grade Summary Report:** retain for 3 months.

6. **Section Tests:** retain for 3 months.

> The detailed procedures describing the completion, retention, and submission of all weight scale forms are documented in the documenting and reporting scale results section of this manual.

14.4.8 Changes to Scale Data

Changes may be made to any scale data by the scaler whose license number appears on the document or by an approved company representative who is authorized to make such a change.

14.4.9 Emergency Procedures

Weight scales are subject to breakdown. If this occurs, responsibilities are as follows:

- weight person - immediately inform the district scaling supervisor and the weight scale owner/operator,
- weight scale owner/operator - ensure the scale is repaired as soon as possible, and
- District Scaling Supervisor - provide direction in initiating procedures to ensure all production is correctly accounted for during the breakdown.

The following section outlines emergency procedures to be followed in the event of a breakdown.

14.5 Emergency Procedures in the Event of a Weight Scale Breakdown

Trade as defined in the *Federal Weights and Measures Act* is: "the selling, purchasing, exchanging, consigning, leasing or providing of any commodity, right, facility or service on the basis of measure and includes the business of providing facilities for measuring,"

14.5.1 Breakdown of the Weighing Device (Weight Indicator is Unavailable or Inaccurate)

There is no provision in the *Forest Act* for breakdowns and any weights estimated or taken from not legal for trade devices would not comply with the *Weights and Measures Act*.

Section 24(b) of the *Weights and Measures Act* says: "Every trader is guilty of an offence who uses, or has in his possession for use, in trade, any device that

a. is not installed in accordance with the requirements of the regulations; or

b. does not measure units of measurement within the limits of error prescribed."

Under this section it is clear that as soon as the weight scale weighs outside of the limits of tolerance it must be shut down. See Chapter 14, Table 14-1 and 14-2 for more information on the limits of tolerance.

14.5.2 Alternatives to Weight Scaling

Weight scale operators are permitted to continue processing loads of timber in the event of scale breakdown, subject to the following conditions:

1. The District Scaling Supervisor must be notified immediately following the breakdown of the scale.

2. All loads may be piece scaled at the discretion of the District Scaling Supervisor.

3. All scale data collected through the emergency procedures must be submitted to the Forest Service along with the regular submission of scale data.

4. If another weight scale is located within 20 km of the malfunctioning scale, it may be authorized for weighing during the breakdown period subject to approval by the District Scaling Supervisor.

5. Loads may be wrapped to protect their integrity, set aside and weighed after the weighing device is repaired.

14.5.2.1 Responsibilities

14.5.2.1.1 Company (Population Holder)

1. To ensure that the District Scaling Supervisor is notified immediately following the breakdown of the scale.

2. To ensure that loads are not weighed using an inaccurate weighing device after it has been identified as inaccurate.

3. To ensure that all data is accurate, all forms are completed correctly and that this scale data is submitted to the Ministry of Forests and Range by the deadline as stated in the site authorization.

4. To circulate copies of this appendix to all timber weighers and other company personnel who will be involved in the completion of any of the forms and/or the submission of data.

14.5.2.1.2 District Scaling Supervisor

1. To ensure that all scale data is completed as required before submission for billing.

2. To ensure that all scalers are aware of this procedure and instruct them if necessary.

14.5.3 Breakdown of the Weight Scale Computer or Sample Selector

In the event the sample selector breaks down, the following procedure is in place:

1. Immediately contact the District Scaling Supervisor for direction.

2. Where the selector cannot be fixed within one day, the District Scaling Supervisor may implement a manual sample selection procedure using a table of random numbers.

3. Contact the District Scaling Supervisor for instructions on the selection of samples during the breakdown period.

14.5.4 Procedures

1. An FS 1217/Weight Scale Load Slip will be generated with all the required information for every load during the breakdown. Refer to *Documenting and Reporting Scale*, Section 11.2.1.3 and Figure 11.3 for details on using this form.

2. Once the weight slips have been entered a summary will be generated for use by the MOFR and the company. Any data used to calculate the weight, as well as the load information is to be submitted to the MOFR.

Scaling Administration 15

Chapters 1 to 14 of this manual have described in detail how timber is scaled and reported. This chapter documents the administrative requirements for scaling and answers a number of basic questions, including:

- 15.1 – What are the roles and responsibilities for scaling?
- 15.2 – How are scale sites authorized for scaling?
- 15.3 – What requirements must be met before timber can be transported?
- 15.4 – How are scalers trained, examined and licensed?
- 15.5 – How are scalers authorized and/or appointed to scale?
- 15.6 – How is compliance assessed for scalers and scale sites under the *Forest Act*, the *Scaling Regulation and Timber Marking and Transport Regulation*?

15.1 The Roles and Responsibilities for Scaling

All scaling and submission of scale data in British Columbia, by and large, is the responsibility of the licensee. Scalers may work under the direct employ of scale site holders or under contract to the scale site holder. Scaling by ministry employees is usually confined to relatively minor volumes attributed to trespass, seizures, waste, and other minor transactions.

The ministry's role includes, but is not limited to:

1. Authorizing scale sites and setting scale site conditions,
2. Designating where timber must be scaled,
3. Examining and licensing scalers,
4. Authorizing scalers and setting all scaling procedures,
5. Setting scale data computation and control procedures and standards, and
6. Assessing compliance with all procedures and standards.

Most administration surrounding each role is supported by the ministry's Scaling Administration and Control System (SCS).

15.2 Scale Site Application and Authorization

15.2.1 Site Registration

All scale sites must be registered on SCS and be given both a site location and name. A unique four-character alphanumeric identifier code will be assigned on SCS at the time the registration data is entered.

15.2.2 Applicants Responsibilities

The owner and/or operator of the proposed operation must apply to the district manager for a Scale Site using application form FS1309. The application must be in writing and delivered to the District office by mail or electronically and should include a map or sketch of the scale's location in relation to the scaling yard, a description of the scale house accommodation, the type and size of the weight scale to be installed, and the proposed computer hardware and software.

15.2.3 Ministry Responsibilities

District scaling supervisors are generally responsible for ensuring that all sites in their jurisdiction are registered on SCS. A new site is to be given a new site code rather than reusing an obsolete code. This provides consistent information for client histories and avoids any issues with outstanding debts or non-compliance at the former site.

Shown below is an example of the FS 1309 – Scaling Site Application form, available on the Public Forms Index

BRITISH COLUMBIA
The Best Place on Earth

Ministry of Forests and Range

SCALING SITE APPLICATION FORM

DATE: January 12, 2007	FILE: 21630 – 35E

In accordance with Section 95 of the *Forest Act* I hereby apply for authorization as an official site of scale for timber.

Complete this Section if a Registered Company.

Circle one: Corporation Association Society	
Company Name:	Reg. #: test
Company Address:	
Postal Code:	Email:
Phone Number: ( )	Fax Number: ( )

Complete this Section if NOT a Registered Company.

Full Name of Site Owner: (FIRST) Andrew	(MIDDLE) John	(LAST) Williams
Address: 3742 Oak St. Mapleville, BC		BC Driver's Licence: 6427398
		Postal Code: V2Z 1M9
Phone Number: (250) 545-1212	Fax Number: (250) 545-1213	
Site Name: AJ Mill		

Email Address: andyw2005@email.com	
Location of Site: 3642 Oak St.	
Scaled Timber Outgoing: ☑ Y ☐ N	Estimated volume of outgoing timber/yr. 200 m^3
Site Contact: Andy Williams	Estimated volume of incoming unscaled timber/yr. 480 m^3
Type of Site: ☐ W ☐ P ☑ Portable ☐ SFP Type	Name of Licenced Scaler: Ian Scaler
(Applicant's Signature)	Andrew John Williams (Print Name in Full)

Forest Service Use Only

Client # of Site:	Site Code:
Forest Official:	Date:
Print Name & Title:	

FS 1309 HVA 2007/04

Please be advised that the information may be released under the *Freedom of Information and Protection of Privacy Act*

Figure 15.1 An Example of an Application for a Scale Site (FS 1309).

15.2.4 Scale Site Authorizations

The Forest Act and Ministry Scaling Policy require owners and/or operators of a scale site to acquire a written scale site authorization from the ministry prior to commencing any scaling at that site. Failure to comply with this requirement is an offence under the Forest Act. The Forest Act also empowers the ministry to attach conditions to the scale site authorization to ensure a complete and accurate scale.

Scale site authorization helps ensure:

- timber is scaled in an orderly and systematic manner,
- data is correctly captured and submitted to the ministry, and
- all ministry requirements are clearly defined and understood by all persons on the scale site.

> A scale site authorization may be denied if the ministry has reasonable grounds to believe the applicant will not comply with provisions under Parts 5, 6, 7, 9, 10 or 11 of the *Forest Act,* the regulations, or with the conditions to be included in the scale site authorization.

15.2.4.1 Content of a Scale Site Authorization

The Forest Act empowers the ministry (usually through the district scaling supervisor) to set conditions that will "...ensure a complete and accurate scale." The ministry also has the authority to "...attach, remove, or alter a condition at any time." As such, the ministry has latitude in setting and enforcing conditions that support a reliable scale.

Conditions common to scale site authorization may include:

- conditions that provide clear direction on how to process all loads arriving at the site, including how to handle loads that have not been designated to the site and/or fail to meet other requirements such as timber marking,
- a clear statement on when scale returns (in the approved format) are to be completed and received by the ministry,
- conditions that support:
  - an accurate and complete scale,
  - orderly capture, reporting and submission of scale data,
  - retention of scale information,

- check scaling and site monitoring, and
- effective dates (terms are not to exceed five years).

The system user may draft custom clauses where these conditions do not satisfy the specific requirements of a given site. A number of considerations govern the issuance of custom clauses. They must be:

- reasonable (can the site holder/operator comply without undue hardship?),
- enforceable (can an inspecting officer effectively evaluate compliance?),
- legal (do they conform with legislation in the Forest Act and Regulations?),
- equitable (do they conform with ministry policy and procedure?),
- compatible (do they conflict with any other clause(s) in the authorization?), and
- coherent (are they written clearly and concisely? Are they readily understood?).

During the inspection process, scale site authorizations may routinely be reviewed to ensure the clauses are sufficient to ensure ministry needs. Any changes to the authorization document may require that:

- when an entire new scale site authorization document is issued, it clearly states that it "cancels and replaces the previous one dated _____",
- the applicant may be required to sign a statement confirming that the new authorization has been read and understood after review with a Forest Officer.
- scale site authorizations should not be allowed to lapse and must be renewed by the site owner by application to the District manager, and
- the changes must be discussed in detail with the site holder/operator.

15.2.4.2 Ministry Responsibilities

The ministry will:

- review the application and ensure it is complete before proceeding,
- conduct an examination of the proposed scale site and facilities,
- issue a scale site authorization document if satisfied that the relevant parts of the Forest Act, Forest and Range Practises Act, Scaling Regulation, Timber Marking and Transport Regulation and other related regulations will be complied with,
- prior to commencement of operations, discuss all conditions of the authorization with the applicant to ensure they are understood,

- register the site on SCS,
- conduct regular site inspections to ensure site conditions are being complied with, and
- manage the authorization document through amendments, additions, and replacements upon expiry.

Once a scale site authorization document has been issued, it is the responsibility of the scale site owner/operator as well as all scalers working on the site, to be fully familiar with the conditions and requirements of the authorization. If any matter needs clarification, contact the district scaling supervisor or check scaler.

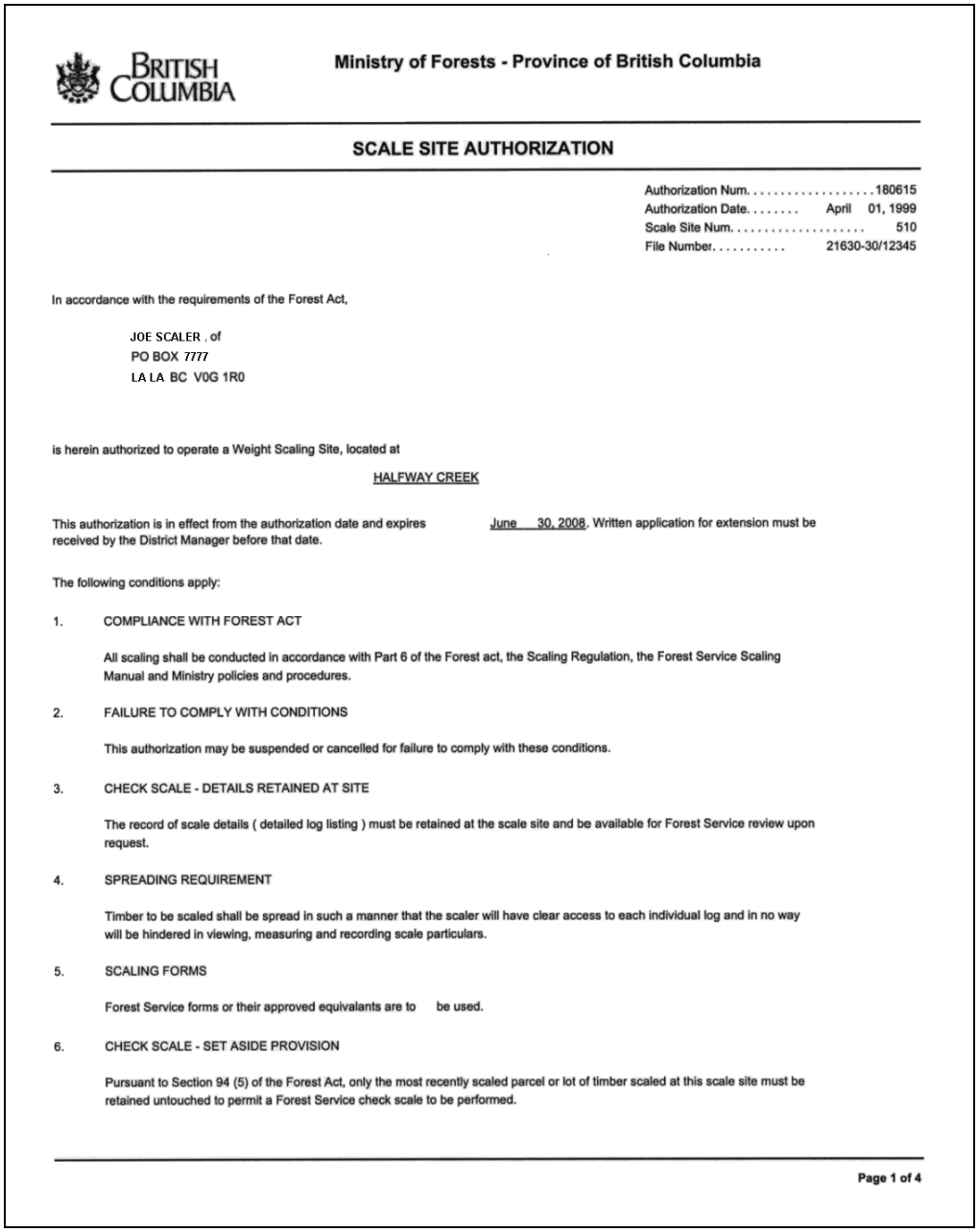

BRITISH COLUMBIA

Ministry of Forests - Province of British Columbia

SCALE SITE AUTHORIZATION

Authorization Num. 180615
Authorization Date. . . . . April 01, 1999
Scale Site Num. 510
File Number. 21630-30/12345

In accordance with the requirements of the Forest Act,

JOE SCALER , of
PO BOX 7777
LA LA BC V0G 1R0

is herein authorized to operate a Weight Scaling Site, located at

HALFWAY CREEK

This authorization is in effect from the authorization date and expires June 30, 2008. Written application for extension must be received by the District Manager before that date.

The following conditions apply:

1. COMPLIANCE WITH FOREST ACT

   All scaling shall be conducted in accordance with Part 6 of the Forest act, the Scaling Regulation, the Forest Service Scaling Manual and Ministry policies and procedures.

2. FAILURE TO COMPLY WITH CONDITIONS

   This authorization may be suspended or cancelled for failure to comply with these conditions.

3. CHECK SCALE - DETAILS RETAINED AT SITE

   The record of scale details (detailed log listing) must be retained at the scale site and be available for Forest Service review upon request.

4. SPREADING REQUIREMENT

   Timber to be scaled shall be spread in such a manner that the scaler will have clear access to each individual log and in no way will be hindered in viewing, measuring and recording scale particulars.

5. SCALING FORMS

   Forest Service forms or their approved equivalants are to be used.

6. CHECK SCALE - SET ASIDE PROVISION

   Pursuant to Section 94 (5) of the Forest Act, only the most recently scaled parcel or lot of timber scaled at this scale site must be retained untouched to permit a Forest Service check scale to be performed.

Page 1 of 4

Figure 15.2 An Example of a Scale Site Authorization Letter.

15.3 Designating the Place of Scale

Under the *Forest Act* and the *Timber Marking and Transport Regulation* before transporting timber from its area of harvesting, the place of scaling (for each timber mark) must be designated to one or more authorized scale sites.

The administrative process of determining the place(s) where timber can be taken to be scaled is commonly referred to as "mark/site designation" (MSD).

Mark/site designation is an essential administrative process to satisfy the requirement that the scaling and transport of all timber take place in an orderly and controlled manner.

15.3.1 Applicant's Responsibilities

> To transport timber off any Crown or private land you must first obtain:
>
> 1. A timber mark certificate, and
> 2. A mark/site designation letter.

The Timber Marking and Branding chapter of this manual describes timber marks and marking requirements. To obtain a mark/ site designation contact the local Ministry of Forests office or go to the Forms Index and complete a written application, FS1307, as shown in Figure 15.3 on the next page. This form may vary by region or district, and may be part of a more comprehensive form that may be delivered to the District representative electronically. To apply for a mark/site designation you must be the licence holder in the case of Crown timber, or the landowner in the case of private timber. Other persons may obtain a mark site designation only when the licensee or landowner gives them written authorization to act on their behalf.

The mark/site designation directs the transport of timber to one or more designated scale sites, and may contain conditions concerning the transport or scaling at that site. Transport of unscaled timber without a mark/site designation or to a location other than those approved is in contravention of the *Forest Act* and may result in seizure, penalties, and/or summary conviction.

BRITISH COLUMBIA
The Best Place on Earth

Ministry of Forests and Range

MARK/SITE DESIGNATION APPLICATION

TO: District Manager	DATE: August 24, 2006
Arrow Boundary FOREST DISTRICT	FILE: 21630 – 25

I, John A Doe request a timber mark/scale site designation under ***Section 94(1) of the Forest Act and Section 2 of the Timber Marking and Transportation Regulation*** for the following timber marks to the following scaling sites.

Please indicate the type of timber product that you are sending to each scale site listed below by using any combination of the following terms to describe the timber product:

- Crown, private, species name, green, dry, firekilled, sawlogs, poles, pulp, grade name, short log, long log or any other appropriate descriptor.

TIMBERMARK	SCALE SITE NO.	SCALE SITE NAME	PRODUCT	VOLUME	DESIGNATION EXPIRY
72368	2B4C	G Adolphs Mill	CE logs	340 m3	Oct 30,2006

A person whose timber is scaled under the Part must ensure a complete and accurate scale of the timber is performed (Forest 96(3))

I agree, by signing this application, to the method of scaling conducted at the above scale sites.

I understand that approval of this **Timber Mark/Scale Site Designation** is valid only for the timber marks transported to the scale sites indicated above.

Signatures of Mark Holder(s)	**Scale Site**
John Doe	
	Name of Site: G Adolphs Mill
Mailing Address: PO Box 56989 Scaletown, BC V9Z 2Z2	Mailing Address: 1213 Bush Rd
Phone Fax Numbers: 250-544-9999	Phone Fax Numbers: 250-555-9898
Email Address: jdoe@email.com	Email Address: n/a

FS 1307 HVA 2007/04 Please be advised that the information may be released under the *Freedom of Information and Protection of Privacy Act*

Figure 15.3 Example of a Mark/Site Designation Application (FS 1307).

15.3.2 Ministry Responsibilities

The ministry's first responsibility is to ensure all prospective people who will transport timber are clearly aware of ministry requirements.

In processing the application for mark site designation, the ministry must ensure:

- tenures/timber marks are correct and in good standing,
- owner or licensee has given any agents written consent for acting on their behalf,
- sites designated for scaling are authorized and have suitable resources to conduct an accurate scale, and
- other district offices are notified if designated scale sites lie outside the district in which the timber originates.

Applications meeting ministry requirements will receive formal approval in the form of a letter (example Figure 15.4), or MSD web site access which will list all designated timber marks to a particular site.

Mark/Site Designation Access Site

This letter will specify timber marks and the scale site(s) to which the marks have been designated for scaling. Where an application requests more than one scaling location and one or more scale sites are deemed unacceptable, the approval will be restricted to the acceptable scale sites. The scale site designation may contain other conditions concerning the scaling or transport of the timber.

To enable tracking of timber movement and scaling mark site, MSDs are entered on the ministry's Scale Administration and Control System (SCS).

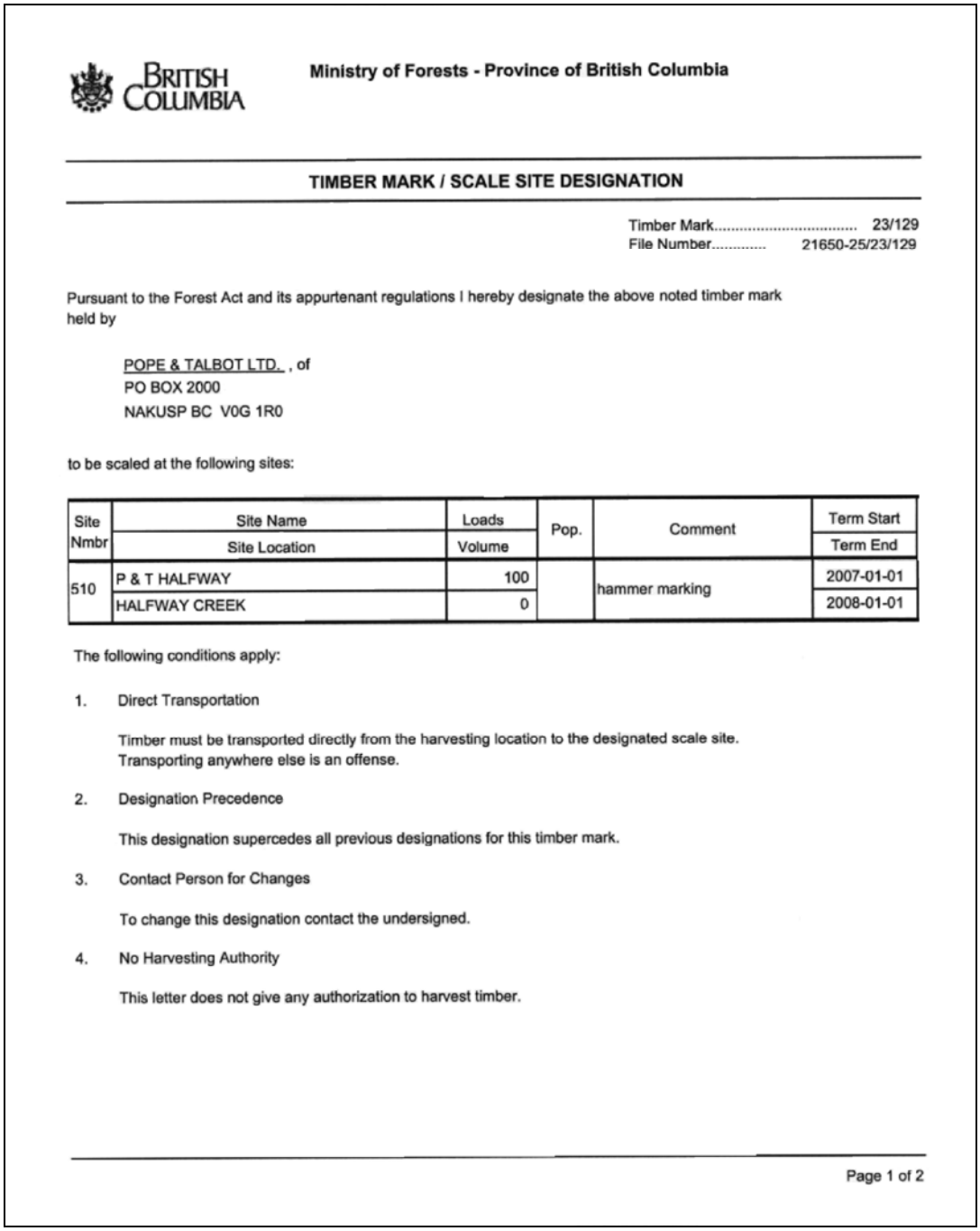

BRITISH COLUMBIA

Ministry of Forests - Province of British Columbia

TIMBER MARK / SCALE SITE DESIGNATION

Timber Mark..... 23/129
File Number..... 21650-25/23/129

Pursuant to the Forest Act and its appurtenant regulations I hereby designate the above noted timber mark held by

POPE & TALBOT LTD. , of
PO BOX 2000
NAKUSP BC V0G 1R0

to be scaled at the following sites:

Site Nmbr	Site Name / Site Location	Loads / Volume	Pop.	Comment	Term Start / Term End
510	P & T HALFWAY	100		hammer marking	2007-01-01
	HALFWAY CREEK	0			2008-01-01

The following conditions apply:

1. Direct Transportation

   Timber must be transported directly from the harvesting location to the designated scale site. Transporting anywhere else is an offense.

2. Designation Precedence

   This designation supercedes all previous designations for this timber mark.

3. Contact Person for Changes

   To change this designation contact the undersigned.

4. No Harvesting Authority

   This letter does not give any authorization to harvest timber.

Page 1 of 2

Figure 15.4 Example of a Mark Site Designation (page 1).

15.3.3 Scaler and Scale Site Operator's Responsibilities

Scalers and Site Operators are responsible for ensuring that all timber marks received at a scale site have been designated by the ministry for scaling at that site. The approval may be in one of the following forms:

- letter that the vendor presents to the receiving site (usually with the first load delivered), or
- list of designated timber marks, which the district scaling supervisor issues to the receiving scale site operator on a regular basis, or
- access to the MSD Access Site.

If any timber is delivered to a scale site without the required documentation, it is the responsibility of both the scaler and the scale site operator to ensure that district scaling staff is informed immediately. While specific conditions may vary from district to district, the scalers authorization and the scale site authorization should set instructions on how to process timber that has not been designated to be scaled at a given scale site. Additional conditions may also be included in the mark/site designation letters. The district scaling supervisor or check scaler should be contacted if any conditions are not clear.

15.4 The Training, Examination and Licensing of Scalers

The objective underlying the examination and licensing of scalers is to assure government, industry, and all other parties having an interest in the scale that scaling is conducted by qualified and competent scalers. Scaling licences may be issued by the Chief Forester following successful completion of a practical and a written examination conducted by scaling examiners appointed by the Chief Forester.

15.4.1 Scaler Training

The responsibility for scaler training rests with colleges, technical schools, and other private institutions. The forest industry supports scaler training and may provide facilities for field instruction and examination.

While anyone can challenge a scaling examination, candidates are encouraged to enrol in a formal scaling course. Courses range from weekend or evening classes to full time courses spanning several months. Scaling by its nature requires not only a good theoretical foundation, but also manual dexterity coupled with sound judgement. Experience has shown these skills are developed through on the log and classroom instruction, as well as practice, and ongoing coaching. As such, students should ensure prospective courses have at least 50 percent of the course content devoted to field exercises. Scalers will be examined on the Scaling Manual, the Forest Act (as it relates to scaling issues), *Scaling Regulation and Policies and the Timber Marking and Transportation Regulation*. Scaling does require a basic understanding of mathematics and weakness in this area may be a significant disadvantage.

15.4.2 Scaling Examination

Separate scaling licences are issued for the coast and the interior. Generally, the coast is considered the area west of the Cascade Mountains and the interior is considered the area east of the Cascade Mountains. Because the grading schedules are significantly different scalers with a coast licence are not authorized to scale timber originating from the interior. Similarly, scalers with an interior licence are not authorized to scale timber originating from the coast. To be eligible for an authorization to scale, scalers will have to be successful on the exam for the area in which they would like authorization.

15.4.3 Examination Procedures

Scaling examinations are held at the discretion of the regional scaling manager and are generally held in the spring or fall. Information regarding dates and locations of exams can be obtained by contacting any Forest Service office.

All scaling students should be aware that examinations are held only when there is adequate demand. Examinations are open to any member of the public who submits an application and pays the examination fee. Examinations are generally advertised at Forest Services offices at least two to four weeks prior to the examination date.

The standards for conducting the practical exam, selection, spreading, and scaling of exam logs, setting and marking the written exam, are established and monitored by the Board of Scaling Examiners. In all cases, appointed scaling examiners must conduct the exam. Coast and Interior exams are two parts, consisting of a written and a practical portion. A minimum of 75% must be achieved to be successful. The examination standards can be found here:

Board of Scaling Examiners Standards

15.4.4 Requirements to Take the Examination

15.4.4.1 Applications

Anyone wishing to take the licensed scalers examination must submit an application form to the applicable Regional office (FS 87) available at:

Forms Index

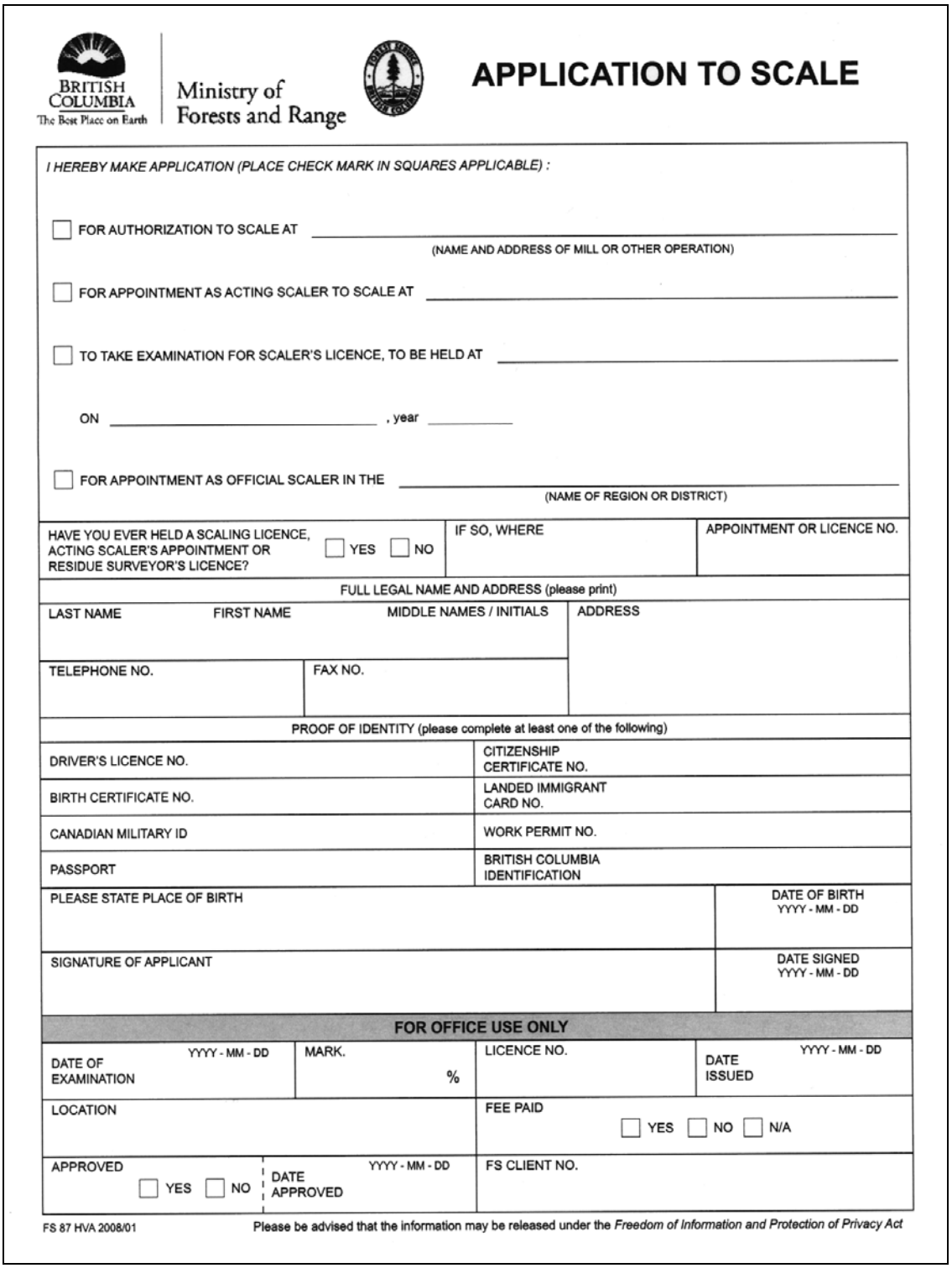

BRITISH COLUMBIA
The Best Place on Earth

Ministry of
Forests and Range

APPLICATION TO SCALE

I HEREBY MAKE APPLICATION (PLACE CHECK MARK IN SQUARES APPLICABLE) :

☐ FOR AUTHORIZATION TO SCALE AT _____
(NAME AND ADDRESS OF MILL OR OTHER OPERATION)

☐ FOR APPOINTMENT AS ACTING SCALER TO SCALE AT _____

☐ TO TAKE EXAMINATION FOR SCALER'S LICENCE, TO BE HELD AT _____

ON _____ , year _____

☐ FOR APPOINTMENT AS OFFICIAL SCALER IN THE _____
(NAME OF REGION OR DISTRICT)

HAVE YOU EVER HELD A SCALING LICENCE, ACTING SCALER'S APPOINTMENT OR RESIDUE SURVEYOR'S LICENCE? ☐ YES ☐ NO	IF SO, WHERE	APPOINTMENT OR LICENCE NO.

FULL LEGAL NAME AND ADDRESS (please print)

LAST NAME	FIRST NAME	MIDDLE NAMES / INITIALS	ADDRESS
TELEPHONE NO.	FAX NO.		

PROOF OF IDENTITY (please complete at least one of the following)

DRIVER'S LICENCE NO.	CITIZENSHIP CERTIFICATE NO.
BIRTH CERTIFICATE NO.	LANDED IMMIGRANT CARD NO.
CANADIAN MILITARY ID	WORK PERMIT NO.
PASSPORT	BRITISH COLUMBIA IDENTIFICATION

PLEASE STATE PLACE OF BIRTH	DATE OF BIRTH YYYY - MM - DD
SIGNATURE OF APPLICANT	DATE SIGNED YYYY - MM - DD

FOR OFFICE USE ONLY

DATE OF EXAMINATION YYYY - MM - DD	MARK. %	LICENCE NO.	DATE ISSUED YYYY - MM - DD
LOCATION		FEE PAID ☐ YES ☐ NO ☐ N/A	
APPROVED ☐ YES ☐ NO	DATE APPROVED YYYY - MM - DD	FS CLIENT NO.	

FS 87 HVA 2008/01

Please be advised that the information may be released under the *Freedom of Information and Protection of Privacy Act*

Figure 15.5 Example of an Application to Take a Scaling Exam/Appointment as an Acting Scaler/Authorization to Scale at a Site.

15.4.4.2 Payment of Examination Fees

The Scaling Regulation requires that individuals applying to take an examination for a scalers licence must pay an examination fee and the regulation states the amount of the fee. Ministry of Forests employees and individuals who have paid an acting scaler appointment fee within the past twelve months of the examination date are exempted from payment.

15.4.5 The Administration of Scaling Licences

15.4.5.1 Marking Requirements

Different Regional or District Scaling Examiners will mark all examinations twice in order to minimize errors.

15.4.5.2 Review by Unsuccessful Candidates

Any candidate taking a scaling examination is entitled to review the exam with a scaling examiner. Failing students should have a clear understanding where they went wrong before attempting the examination again.

15.4.6 Other Examination and Endorsements

15.4.6.1 Scaling Endorsements

As scaling serves the needs of various users, it must be responsive to often changing needs. To ensure all scalers are current and able to meet these needs, it is periodically necessary to conduct additional endorsement examinations. Such endorsement examinations have included; metrication in the late 1970s, interior grading in the late 1980s, coastal letter grades in the early 1980s, major coastal grading changes in 1990, and new interior grades in 2006.

Failure to pass an endorsement exam within a specified time will result in termination of the scaling licence. It may also terminate the authorization to scale or make the scaler ineligible for future authorizations until the endorsement has been achieved. Where scalers are inactive and/or miss the scheduled endorsement within the required period they are required to take the full licensing exam again.

15.4.6.2 Re-examinations

In addition, the Forest Act empowers the Chief Forester to require a scaler to be re-examined. This provision is usually exercised where check scales or other inspections have concluded a re-examination is needed to comfirm the scaler's ability to meet licensing standards. Failure to pass the examination within the specific time will render the scaling licence cancelled.

15.4.6.3 Other Examinations

As the Forest Act authorizes the appointment of acting scalers, other examinations are also administered to ensure applicants are capable of meeting ministry requirements. These examinations are generally set and administered on a local basis under the overall guidance of the Board of Scaling Examiners.

15.4.7 Scalers Oath

Because scale data serves the needs of buyers and sellers, as well as others, it is of utmost importance that scalers be absolutely objective in their conduct.

All scalers are required to swear and sign the following oath as part of receiving their scaling licence or being authorized and/or appointed to scale:

> "I, _____, do solemnly swear that I will, in my capacity as a scaler, without fear, favour, or affection, and to the best of my ability and judgement, scale, record and report scale results in accordance with the *Forest Act*, applicable regulations, the Scaling Manual and other requirements set by the Ministry of Forests and Range."

This form (FS 1314) is available on the Forms Index and may become part of new scalers' authorization to scale. The fact that a scaler has sworn this oath is recorded on their file in SCS.

To students just obtaining a scaling licence:

Students obtaining a scaling licence should be commended for their achievement. All students, however, should understand that passing the scaling examination is just the first step toward becoming a scaler.

To become proficient and maintain your skills as a scaler, you need experience on the job, periodic study, and you should always be receptive to new knowledge.

A scaling licence does not authorize you to scale timber for purposes of the Forest Act. If you want to scale, you must also be appointed and/or authorized to scale

15.5 Authorization and Appointments of Scalers

15.5.1 Legal Requirement for Authorization and Appointments

> Anyone wishing to scale for purposes of the *Forest Act* must first be appointed and/or authorized to scale by the ministry.

The *Forest Act* requires that all scalers except Forest Service scalers must be authorized by the Ministry of Forests to conduct the official scale, and provides for the appointment of acting scalers, official scalers and Forest Service scalers. It also states that it is an offence for any person to represent that they are authorized to perform a scale if that person is not so authorized.

15.5.1.1 Administrative Reasons for Authorization and Appointments

Authorization and appointment of scalers is carried out for the following reasons:

- to ensure the public's valuable resource is scaled by the most competent scalers available,
- to ensure scalers are clearly aware of their legal obligations and responsibilities with respect to scaling, and the documentation, retention, and submission of scale data, and
- to enable the ministry to monitor scaling activity and conduct check scales by knowing who is scaling, as well as, where and when.

15.5.2 Terms of Requirements of Authorization and Appointments

Authorizations and appointments are restricted to the geographic jurisdiction of the signing official. They are also limited in duration by policy.

To meet the objectives of ensuring a reliable and controlled scale, the Forest Act provides considerable administrative flexibility in scaling appointments and authorizations. In all cases, unless otherwise specified, appointments and authorizations are restricted to the geographic jurisdiction of the signing official and are limited in duration.

15.5.2.1 Official Scalers

Official Scalers are usually appointed by the Regional Executive Director, District Manager, or Forest Officer for a term not exceeding five years. Appointments may be re-issued upon expiry.

Requirements to be appointed as an official scaler include:

- valid scaling licence (endorsements must be current),

- demonstrated scaling competency (an acceptable check scaling history),
- scaling experience (minimum of five years for coastal scalers and three years for interior scalers), and
- at least six months scaling activity in the past year.

15.5.2.2 Licensed Scalers

A licensed scaler may be authorized for up to two years and may be re-authorized upon expiry.

Requirements to be authorized as a licensed scaler include:

- valid licence with all endorsements current.

15.5.2.3 Acting Scalers

An acting scaler appointment is considered only where:

- securing a licensed scaler would impose unreasonable costs or delays, and/or
- volumes and values are minimal and there is little risk that the scaling requirements of the Forest Act will not be met.

Persons working as a timber weigher or assisting a scaler in taking measurements or other capacity must be appointed as an acting scaler.

Requirements to be appointed as an acting scaler are:

- order must be issued by the regional executive director, the district manager, or a forest officer stating that the timber may be scaled by an acting scaler,
- applicant must complete a Timber Weigher's examination if applicable,
- appointments may be conditional upon the applicant attending the next scaling examination held in the region. Each acting scaler appointment may not exceed one year. While these appointments are normally for minor volumes and for a short term they may be renewed upon expiry, and
- applicants who scale more than 300 m3/year must pay a fee of $100.

15.5.2.4 Forest Service Scalers

An employee of the Ministry of Forests may be appointed as a Forest Service scaler if they:

- hold a valid scaling licence, and

- have been appointed as a forest officer.

Forest Service scalers do not have to be authorized to scale.

15.5.3 How to Obtain an Authorization and/or Appointment

Any person requiring an authorization or appointment should complete an Application to Scale (FS 87) as shown in Figure 15.6 and return it to the local Forest Service office for processing.

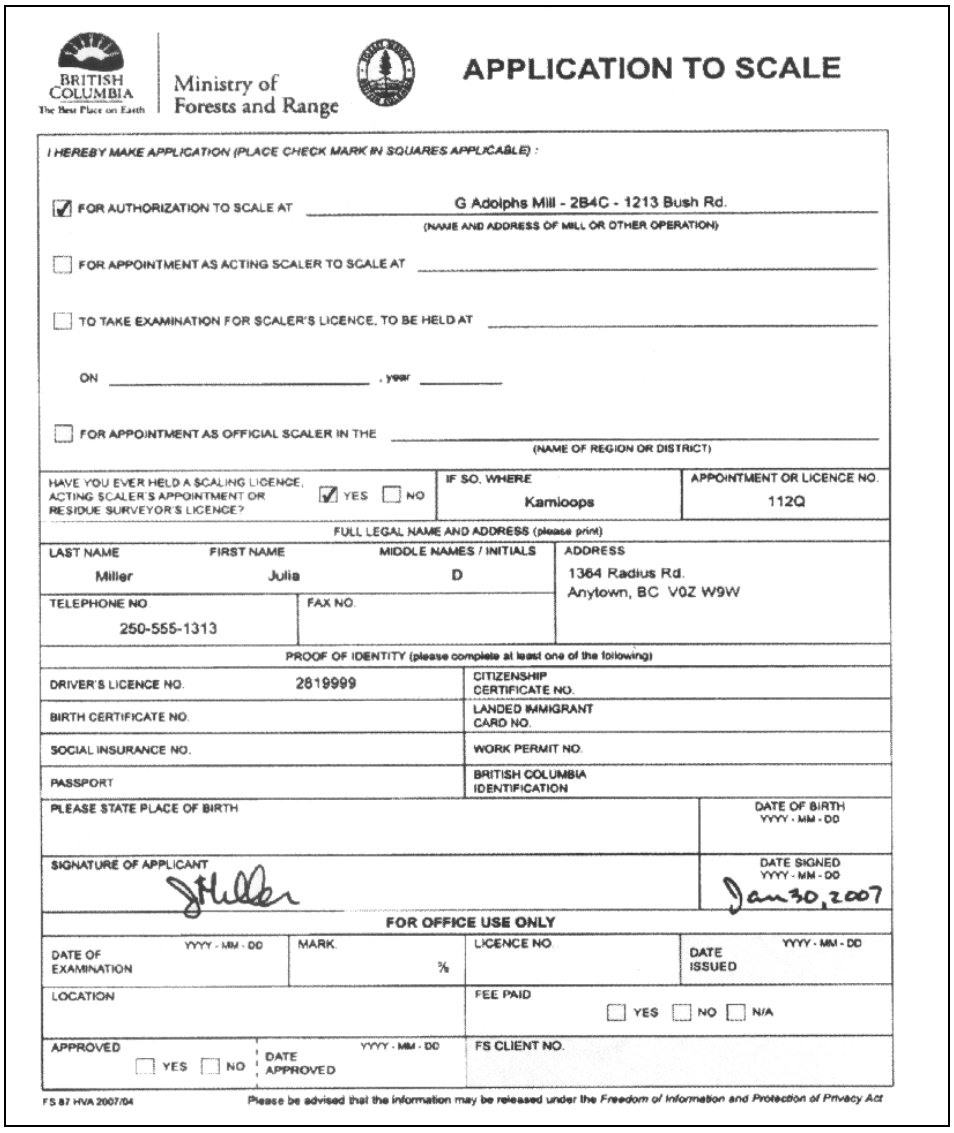

BRITISH COLUMBIA
The Best Place on Earth

Ministry of Forests and Range

APPLICATION TO SCALE

I HEREBY MAKE APPLICATION (PLACE CHECK MARK IN SQUARES APPLICABLE) :

☑ FOR AUTHORIZATION TO SCALE AT G Adolphs Mill - 2B4C - 1213 Bush Rd.
(NAME AND ADDRESS OF MILL OR OTHER OPERATION)

☐ FOR APPOINTMENT AS ACTING SCALER TO SCALE AT _____

☐ TO TAKE EXAMINATION FOR SCALER'S LICENCE, TO BE HELD AT _____

ON _____ , year _____

☐ FOR APPOINTMENT AS OFFICIAL SCALER IN THE _____
(NAME OF REGION OR DISTRICT)

HAVE YOU EVER HELD A SCALING LICENCE, ACTING SCALER'S APPOINTMENT OR RESIDUE SURVEYOR'S LICENCE? ☑ YES ☐ NO	IF SO, WHERE: Kamloops	APPOINTMENT OR LICENCE NO.: 112Q

FULL LEGAL NAME AND ADDRESS (please print)

LAST NAME	FIRST NAME	MIDDLE NAMES / INITIALS	ADDRESS
Miller	Julia	D	1364 Radius Rd. Anytown, BC V0Z W9W

TELEPHONE NO.	FAX NO.
250-555-1313	

PROOF OF IDENTITY (please complete at least one of the following)

DRIVER'S LICENCE NO. 2619999	CITIZENSHIP CERTIFICATE NO.
BIRTH CERTIFICATE NO.	LANDED IMMIGRANT CARD NO.
SOCIAL INSURANCE NO.	WORK PERMIT NO.
PASSPORT	BRITISH COLUMBIA IDENTIFICATION

PLEASE STATE PLACE OF BIRTH	DATE OF BIRTH YYYY - MM - DD

SIGNATURE OF APPLICANT J Miller	DATE SIGNED YYYY - MM - DD Jan 30, 2007

FOR OFFICE USE ONLY

DATE OF EXAMINATION YYYY - MM - DD	MARK %	LICENCE NO.	DATE ISSUED YYYY - MM - DD

LOCATION	FEE PAID ☐ YES ☐ NO ☐ N/A

APPROVED ☐ YES ☐ NO	DATE APPROVED YYYY - MM - DD	FS CLIENT NO.

FS 87 HVA 2007/04

Please be advised that the information may be released under the *Freedom of Information and Protection of Privacy Act*

Figure 15.6 Completed Application for Authorization to Scale.

15.5.4 Authorization Conditions

In addition to being limited to a time period and an administrative jurisdiction, all scaler authorization documents carry two standard conditional clauses:

- authorization is conditional upon compliance with the *Forest Act*, the *Scaling Regulation*, and approved ministry policies and procedures as detailed in the *Scaling Manual*, and
- failure to comply with conditions of the authorization may result in cancellation or suspension of the authorization.

Other clauses are included in the authorization. These may set conditions to ensure a complete and accurate scale, orderly and timely scaling, conduct on the scale site, documentation and submission of scale data, and other conditions falling under the scalers control.

The issuance of scale authorizations is supported by SCS. Where the standard clauses on the SCS do not satisfy the specific requirements of an authorization, custom clauses may be drafted by the system user. A number of considerations govern the issuance of custom clauses. They must be:

- reasonable (can this scaler comply without undue hardship? Is the requirement under the scalers control?),
- enforceable (can an inspecting officer effectively evaluate compliance?),
- legal (do they conflict with the Forest Act and regulations, the *Canadian Charter of Rights*, *Freedom of Information and Protection of Privacy Act*, *Federal Weights and Measures Act*, or others. Is the ministry empowered to set the condition?),
- equitable (do they conform to ministry policy and procedures?),
- compatible (do they conflict with any other clause(s) in the authorization or other authorization?), and
- coherent (are they written clearly and concisely? Are they easily understood?).

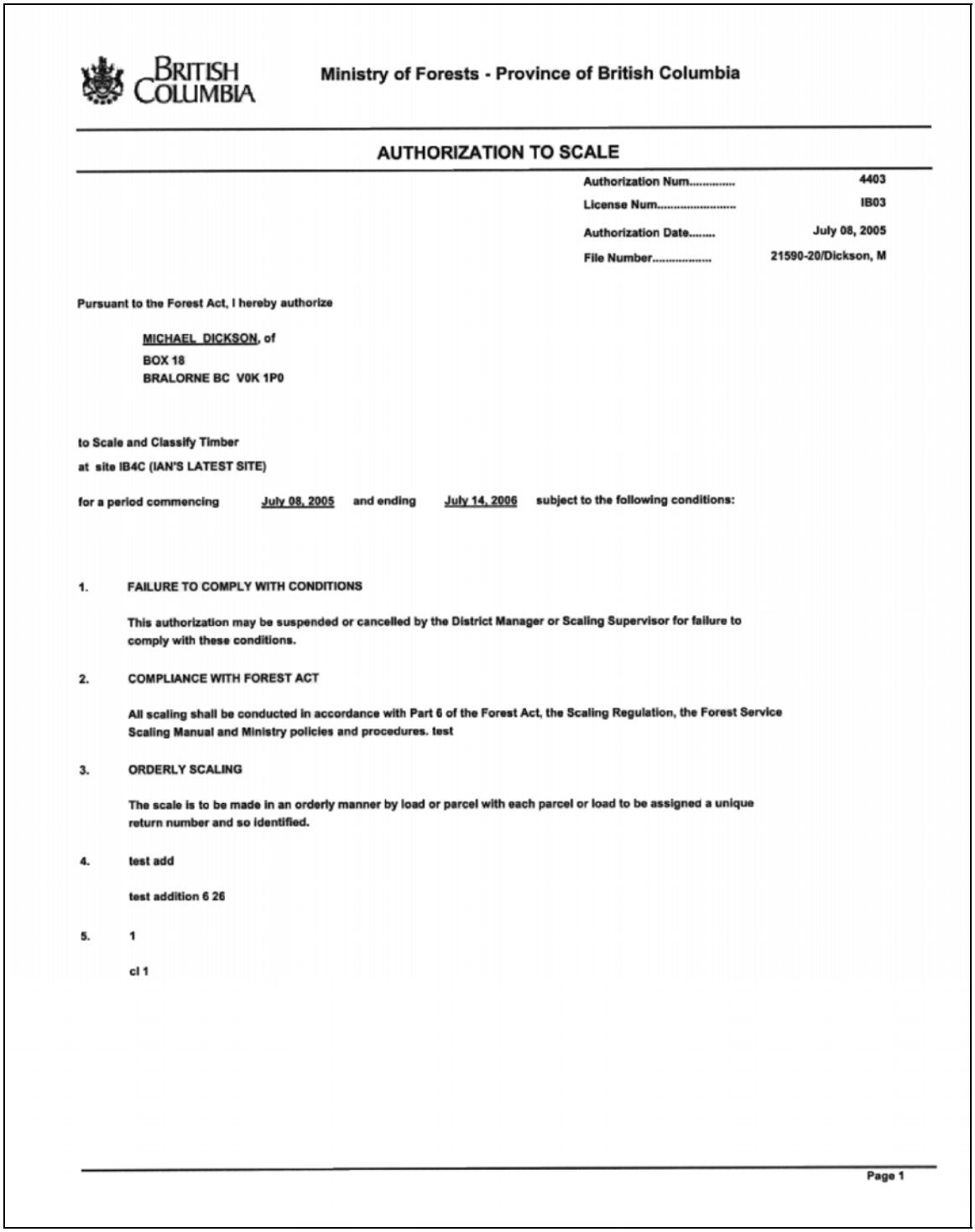

BRITISH COLUMBIA

Ministry of Forests - Province of British Columbia

AUTHORIZATION TO SCALE

Authorization Num.....	4403
License Num.....	IB03
Authorization Date.....	July 08, 2005
File Number.....	21590-20/Dickson, M

Pursuant to the Forest Act, I hereby authorize

MICHAEL DICKSON, of
BOX 18
BRALORNE BC V0K 1P0

to Scale and Classify Timber
at site IB4C (IAN'S LATEST SITE)

for a period commencing July 08, 2005 and ending July 14, 2006 subject to the following conditions:

1. FAILURE TO COMPLY WITH CONDITIONS

   This authorization may be suspended or cancelled by the District Manager or Scaling Supervisor for failure to comply with these conditions.

2. COMPLIANCE WITH FOREST ACT

   All scaling shall be conducted in accordance with Part 6 of the Forest Act, the Scaling Regulation, the Forest Service Scaling Manual and Ministry policies and procedures. test

3. ORDERLY SCALING

   The scale is to be made in an orderly manner by load or parcel with each parcel or load to be assigned a unique return number and so identified.

4. test add

   test addition 6 26

5. 1

   cl 1

Page 1

Figure 15.7 An Example of an Authorization to Scale (Page 1).

15.6 Assessing Compliance with Scaling Requirements

Under policy the Ministry is required to maintain an adequate level of monitoring, inspecting, and auditing to ensure the Crown's interests are protected. This requirement is largely met through three activities:

1. check scaling,
2. scale site inspections, and
3. data monitoring.

Some important compliance requirements are answered with these questions:

- is scaling being done in accordance with this manual, the *Forest Act*, the *Scaling Regulation* and the Scalers Authorization?
- are all conditions of the scale site authorization being complied with?
- is all required documentation in good order?
- is all material that is harvested both scaled and billed?
- has all data been compiled and submitted in accordance with Ministry standards?
- are scaling practices and interpretations consistent?

15.6.1 Check Scaling

15.6.1.1 Purpose of Check Scaling

Check scales are conducted by the Forest Service to maintain scaling standards and uniform scaling practices throughout the province. This is achieved through remeasuring loads of logs scaled by the original scaler and comparing scale results in terms of volume and value in addition to assessing compliance with the scalers authorization to scale.

15.6.1.2 Conducting a Check Scale

Because check scales may result in actions affecting the scalers authorization to scale or scaling licence, it is important that they be representative of the scalers work. To achieve this it is ministry policy that check scales be conducted unannounced and at random whenever feasible. To be valid, the original scaled load must be left untouched after scaling and remain in the same position for check scaling. While the original scaler may be under various production pressures, the check scaler in setting the standard of comparison is required to scale each load with care and not be subject to any time constraints or other operational pressures. The check scale should comprise one full truckload, or parcel of logs.

15.6.1.3 Check Scale Frequency

The objective defined under ministry policy is to set check scale frequency by analyzing the relative revenue risk, the volume scaled, and the scalers past performance. This goal requires an objective evaluation of each scaling situation.

For example, increased check scaling frequency might be warranted where:

- the scalers experience or past performance is weak,
- the scale site conditions may not facilitate accurate scaling, or
- the values and volumes scaled at the scale site are high.

Similarly, a reduced checking frequency might be warranted where:

- values and volumes scaled at the site are low,
- only private timber is scaled and risk assessment is low, or
- scaler past performance or experience is strong.

Scaling policy may also impose specific frequency, volume, or value objectives.

15.6.1.4 Division of Responsibilities – The Scaler

Every scaler must understand the ministry has the responsibility of ensuring that scale results are correct and ensuring scaling duties are being performed correctly. To enable the check scaler to carry out these responsibilities requires the scaler to retain at the scale site and produce a copy of the scale details for the most recently scaled parcel or load of timber and make available any other required documentation for inspection.

At the request of the check scaler, scalers must make themselves available to discuss check scale results.

15.6.1.5 Division of Responsibilites – The Site Operator

The owner and operator of the scale site and the owner of the timber are responsible for ensuring the last scaled load for each scaler is retained for check scaling. To this end the last scaled load must be clearly marked or tagged as scaled as per the scale site authorization and the load should remain in exactly the same position as originally scaled. This is an integral part of ensuring reliable check scale results, and as such, several provisions in the *Forest Act* and *Scaling Regulation* address this topic. In the event of non-compliance with this requirement, the *Scaling Regulation* enables the ministry to assess its costs in attempting to conduct a check scale. In addition, contravention of this section of the *Forest Act* is an offence and subject to ticketing and/or summary conviction. Similarly, contravention may jeopardize the scale site authorization.

15.6.2 Checks to be Made

In addition to the actual scaling, a forest officer will check that authorized scalers are on site to scale the timber, that scaled parcels are being properly identified, that records of scale details are correctly identified and filed and that scale returns are being completed and forwarded on time.

15.6.2.1 Piece Scale

A check scale of a recently scaled parcel is made. The details of the check scale and the original scale each must have the volume and the market value of the timber computed.

To enable meaningful comparisons of the original and check scales, volume and value computations should be made on site. The differences between the volumes are divided by the volume of the check scale to determine the percentage difference. Where the original scale is less, the difference is low or negative. Where the original scale is greater, the difference is high or positive. The difference in value is calculated following the rules for volumes.

The classification of each log to species is to be checked and the number of incorrect classifications identified. Each log where there is no deduction for defect is to have the length and recorded radius measure compared. Any difference in length is considered an error whereas a difference exceeding one radius measure or rad (2 cm of diameter) is considered an error.

15.6.2.2 Weight/Sample Scale

A check of a recently scaled sample is to be made in the same manner as the piece scale parcel is scaled. As with piece scale parcels, computation of values and volumes should take place at the scaling site to enable meaningful comparisons. In addition, the weight recorded should be checked against the load slip. Check that the load has been placed in the correct stratum.

The gross, tare, and net weights of trucks recorded on the daily audit log should be reviewed for abnormalities and it is desirable to re-weigh the most recently weighed truck, gross or tare, to check that this function has been performed correctly. If this is not possible, supervise the weighing of another truck and compare the results with those recorded against previous weighing for compatibility. Check that the weigh scaler has checked the weigh scale each day by weighing a vehicle at different ends of the platform, or in the case of a lift weigh scale, by weighing a test load of known weight. Check that the platform is being kept clean and free of debris, snow, and ice that may affect the accuracy of the weighing.

15.6.2.3 Special Forest Products - Stacked

The most recently scaled stack is to be remeasured and the stack volume computed and compared with the stack volume computed from the original scale. Check the face of the stack and estimate the ratio of area of wood to area of wood, air, and bark. Compare the resultant figure with the factor used to convert stacked volume to volume of wood.

15.6.2.4 Special Forest Products - Piece Sampling

Check count the number of pieces by category in the most recently counted parcel and compare with the scale record. Sample measure a number of pieces in each category and compare the average volume per piece of the category sample with the average used by the original scaler.

15.6.3 Actions on Completion of the Check Scale

15.6.3.1 Check Scale Advisory

An advisory letter showing the scale details for the original and check scales is issued to the original scaler as soon as possible following the check scale. This report is usually printed at the scale site and presented by hand, or mailed to the original scaler.

While the check scale advisory letter can be in different formats, its basic intent is to provide a meaningful feedback mechanism to assist scalers in assessing their own performance and making them aware of any deficiencies in their scaling methods or interpretations. While check scales confirming the original scale need not provide significant detail other than the scale volumes, check scales outside acceptable tolerances should clearly identify the sources of variance.

Release of Check Scale Data

1. Upon completion of a check scale, the check scale comparison reports and detailed log listing will always be provided to the scaler who performed the scale.
2. Check scale comparison reports and detailed log listings are available to other parties upon request, subject to provisions of the *Freedom of Information and Protection of Privacy Act*.

15.6.3.2 Replacement of the Original Scale by a Check Scale

Where the volume or value of the check scales varies by more than the prescribed three percent set by regulation, the *Forest Act* requires that the check scale replace the original scale. The *Forest Act* also authorizes an exemption to this replacement where it is considered the original scale was conducted in accordance with good scaling practices and the differences in the original and check scale are attributable to the condition of the

timber. The term 'good scaling practices' is subjective and requires an assessment of the nature, magnitude and frequency of scaling errors (both interpretative and quantitative).

For example, where timber is sound and of little butt flare, an exemption to a replacement would likely not follow. On the other hand, where timber is decadent and otherwise good scaling practices were followed, an exemption to a replacement would likely be considered.

Where the scale is to be replaced by the check scale, a copy of the new scale return is available to the scaler, the owner of the timber and the mark holder in the Harvest Billing System.

> The responsibility for ensuring that the check scale replaces the original scale rests with the owner of the scale site, the operator of the scale site, the owner of the timber, and the scaler.
>
> Non-compliance to this responsibility constitutes an offence that is subject to ticketing and/or summary conviction.

15.6.3.3 Update Scaler File and Records

The result of each check scale is posted to the scalers file and the scalers record or the Scale and Administrative Control System (SCS) so that each scalers performance can be tracked and monitored.

In addition to reviewing current check scale comparisons, check scales over the previous twelve months are reviewed to identify any possible bias. This shortcoming, along with any other trend or required corrective action should be noted in the check scale advisory letter.

15.6.3.4 Second Check Scale

Under the *Forest Act* a scaler whose scale is replaced by a check scale may request a second check scale if they disagree with the original check scale. As such, this section provides recourse for scalers to have a second binding opinion about a scale.

Where the scaler requests a second and final check scale the ministry is obligated under the regulation to perform it where it is feasible.

Where a second check scale is conducted, it becomes the basis of comparison with the original scale. If the second check scale varies in volume or value from the original scale by more than the prescribed percent (three percent set under the *Scaling Regulation*), the second check scale must replace the original scale. When the original scale is replaced by the second check scale, the scaler requesting the second check scale must pay the costs and expenses incurred by the ministry in conducting the second check scale. Where the

volume or value of the second check scale is between 0 and 3 percent of the original scale, the original scale is confirmed and the scaler who requested the second check scale is free of any expenses incurred by the ministry in conducting the second check scale. The second check scale is binding and final.

15.6.3.5 Second Scales

Unlike a second check scale, which is available to a scaler who disagrees with a check scale, a second scale is available to anyone with an interest in the scale who disagrees with the original scale, but only if it is feasible to conduct another scale.

A second scale is available to any person whose interest is affected by the scale who

- Objects to a scale return completed for a scale, and
- Serves notice of their objection to a regional or district manager and requests a second scale.

Where notice is served, the Ministry is obligated to have the timber scaled again if another scale is feasible.

In addition, a second scale may be required at the discretion of a regional manager or a district manager. A second scale can not be conducted after a check scale.

When conducted, the results of the second scale are binding. When the second scale varies from the original scale by more than three percent in terms of value or volume, the second scale governs for all purposes of the *Forest Act* and must replace the original scale. When the original scale is replaced by a second scale, the person who was liable to pay for the original scale must pay to the government the scaling fees, charge costs and expenses incurred by the ministry in respect of the second scale.

Where, however, the original scale is confirmed by the second scale (the second scale is within three percent in terms of value or volume of the original scale), the person objecting to the original scale must pay for the fees, charges, costs and expenses incurred by the ministry in respect of the second scale and the original scale governs for all purposes of the *Forest Act* and regulations.

15.6.3.6 Suspension of a Scaling Licence

Under the *Forest Act*, the regional executive director or the district manager is authorized to suspend a scaling licence where its holder fails to properly perform their duties or comply with the requirements of the *Forest Act*, scaler authorization, site authorization, or any other applicable scaling regulations.

Where there is a flagrant contravention of scaling requirements the inspecting forest officer should promptly recommend suspension of the scaling licence to the district manager and suspension should proceed under Section 102 (1) of the *Forest Act*.

Where there is no flagrant contravention of scaling requirements the scaler should receive at least one warning letter signed by the district manager prior to any suspension. When a suspension is made, it must be for a specific term of up to one year and the suspension automatically terminates all authorizations and appointments to scale. All suspensions are recorded on the scalers record in the Scale Control System as well as HBS..

Where suspensions is conferred because the scaler lacks expertise, the scaler may be required to pass the licensed scalers examination again before being authorized or appointed to scale. Any person subject to a suspension may be given an opportunity to be heard before the regional executive director or a district manager.

15.6.3.7 Cancellation of a Scaling Licence

The *Forest Act* also provides for the Chief Forester to cancel a scaling licence where scalers fail to properly perform their duties. This action may be required after several suspensions or may be recommended by the inspecting forest officer after a flagrant contravention of scaling requirements. When this action is contemplated, the scaler must first be given an opportunity for a hearing before the Chief Forester.

15.6.4 Scale Site Inspections

15.6.4.1 Purpose of Scale Site Inspections

Scale site inspections are conducted by the Forest Service to assess compliance with the scale site authorization and ensure scaling conditions support an accurate and reliable scale. Where the inspection reveals contravention of Forest Service requirements, the inspection may result in an instruction letter, a suspension, or penalty as provided under the Forest Act.

15.6.4.2 What to Expect From a Scale Site Inspection

Scale site inspections may be conducted at the same time as a check scale or as a separate inspection. Like check scales, these inspections are to be unannounced and random whenever feasible.

Because scaling is conducted under diverse conditions, the format of the inspection varies considerably from site to site. Figure 15.8 provides an example of a Site Inspection Report.

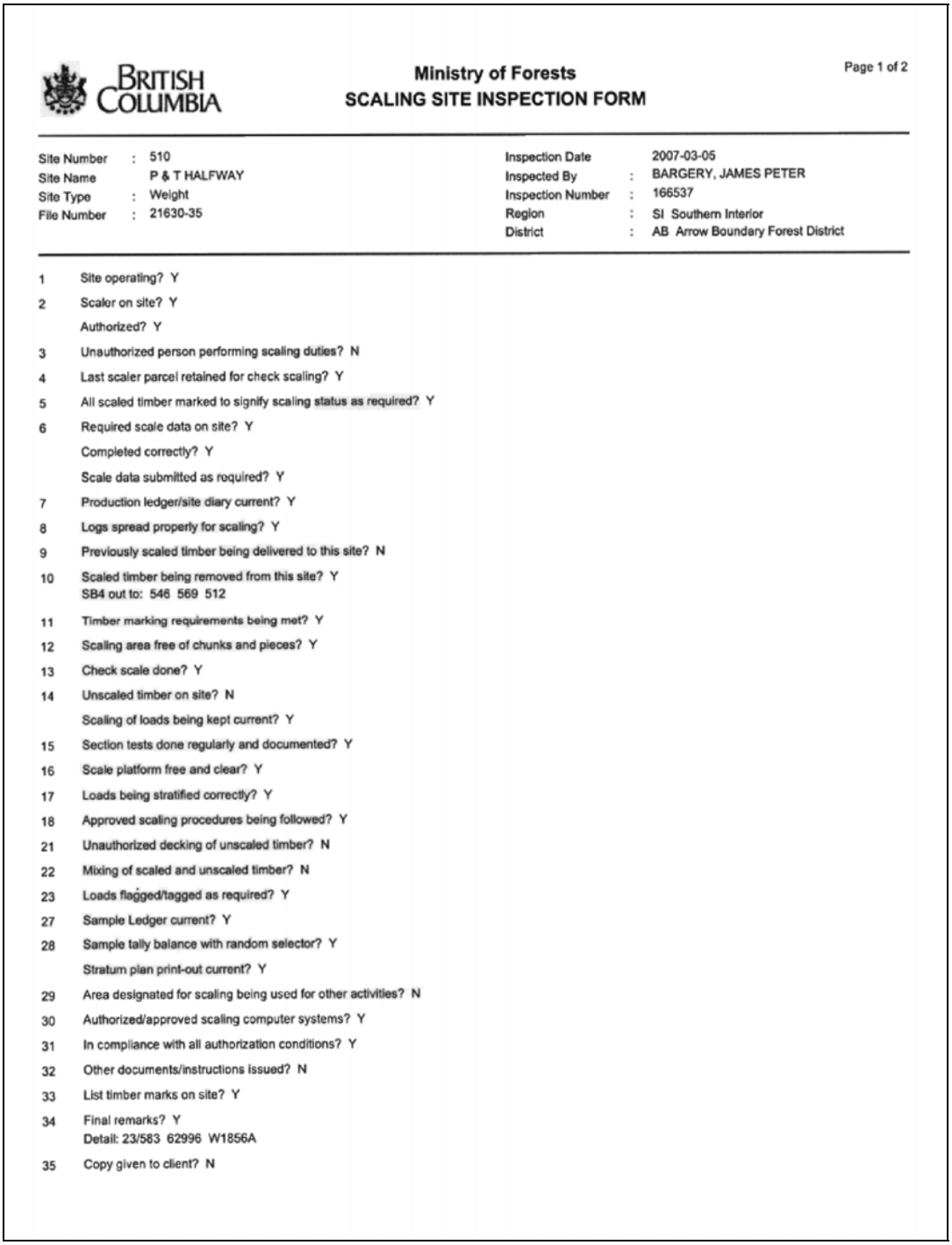

BRITISH COLUMBIA

Ministry of Forests
SCALING SITE INSPECTION FORM

Page 1 of 2

Site Number	: 510	Inspection Date	2007-03-05
Site Name	P & T HALFWAY	Inspected By	: BARGERY, JAMES PETER
Site Type	: Weight	Inspection Number	: 166537
File Number	: 21630-35	Region	: SI Southern Interior
		District	: AB Arrow Boundary Forest District

1 Site operating? Y
2 Scaler on site? Y
Authorized? Y
3 Unauthorized person performing scaling duties? N
4 Last scaler parcel retained for check scaling? Y
5 All scaled timber marked to signify scaling status as required? Y
6 Required scale data on site? Y
Completed correctly? Y
Scale data submitted as required? Y
7 Production ledger/site diary current? Y
8 Logs spread properly for scaling? Y
9 Previously scaled timber being delivered to this site? N
10 Scaled timber being removed from this site? Y
SB4 out to: 546 569 512
11 Timber marking requirements being met? Y
12 Scaling area free of chunks and pieces? Y
13 Check scale done? Y
14 Unscaled timber on site? N
Scaling of loads being kept current? Y
15 Section tests done regularly and documented? Y
16 Scale platform free and clear? Y
17 Loads being stratified correctly? Y
18 Approved scaling procedures being followed? Y
21 Unauthorized decking of unscaled timber? N
22 Mixing of scaled and unscaled timber? N
23 Loads flagged/tagged as required? Y
27 Sample Ledger current? Y
28 Sample tally balance with random selector? Y
Stratum plan print-out current? Y
29 Area designated for scaling being used for other activities? N
30 Authorized/approved scaling computer systems? Y
31 In compliance with all authorization conditions? Y
32 Other documents/instructions issued? N
33 List timber marks on site? Y
34 Final remarks? Y
Detail: 23/583 62996 W1856A
35 Copy given to client? N

Figure 15.8 Scaling Site Inspection Report (Page 1).

A series of checks is required for scaling operations:

- check if the most recent load scaled for each scaler is intact and available for check scaling purposes, and
- trucks waiting to be unloaded should be checked for timber marks and load documentation. Any irregularities should be traced back to the origin of the timber.
- ensure that only authorized persons are scaling and/or assisting with the scaling,
- confirm that any bucking orders, permissions, or restrictions are being complied with,
- check that the scale yard is being cleared of bucking residue, trim ends, and other debris before arriving loads are spread for scaling,
- ensure that the loads are being spread properly,
- cross check a few weight scale slip details with the details on the daily audit log and ensure these agree,
- if feasible, reweigh the most recently weighed truck to ensure weights are the same,
- check that daily scale section tests are performed and corrective action is taken if applicable,
- check stratification calls using sample scale details where feasible or by comparing your stratum assessment with the scaler's at the time of weighing a load,
- check the frequency and documentation of red tag loads,
- seek an immediate explanation where any apparently unscaled timber is mixed with scaled material. If any doubt exists, a seizure may be in order.
- check to ensure that scaled timber brands and marine log brands (if applicable) are being used correctly.
- check compliance with weight scale emergency procedures if applicable, and
- check compliance with other conditions defined under the scale site authorization.
- ensure that copies of all scale returns, scaler diaries, load slips, site ledgers, and other required documentation are current and accurate, complete, and securely and orderly stored,
- check that scalers are maintaining their return or tally numbers, and

- check to ensure that the handheld and software are approved. Ensure that the scalers are downloading to HBS and/or making hard copies regularly and are complying with the requirements in the site authorization and/or computer approval. Periodically enter a set of test data with a known volume and grade profile into the handheld and compare the resultant output to the accepted results.

15.6.4.3 Actions on Completion of a Scale Site Inspection

Upon completion of the scale site inspection, a report is prepared and copied to the scale site file. Any contraventions to the scale site authorization or other ministry requirements must be communicated to the site operator in written form. Where violations are serious and compromise the ability to achieve an accurate and reliable scale at that site, a suspension to the scale site authorization may be considered. Suspending a site authorization is serious and disruptive, and is considered a last resort before cancellation of the authorization.

The *Forest Act* provides that only the regional executive director or district manager may suspend or cancel a scale site authorization and may only do so after giving the authorized party an opportunity to be heard.

Where irregularities observed during an inspection become part of an investigation, which may result in ticketing or other consequences, check scalers must ensure that they are mindful of privileges provided under the *Charter of Rights and Freedoms* and proper investigative procedures.

All the findings should be detailed on the Site Inspection Form. Any discrepancies, issues violations, etc. are to be fully discussed with the Site Owner/Operator or designated representative and resolved, if possible. A signed copy of the report should be left at the site.

Appendices

Appendix 1 Standards for Computing Log and Segregation Volumes

Step	Operations	Units	Decimal	Maximum Value	Source	Example
1	Top radius X Top radius = Top radius squared	cm cm	0 0	199 199 39 601	Tally Calculated	008 008 00 064
2	Top radius squared X Pi = Top area	 Constant cm^2	 6 6	39 601 3.141592 0 124 410.184 792	 Regulation Calculated	00 064 3.141592 0 000 201.061 888
3	Top area/ 10 000 = Top area in m^2	cm^2 Constant m^2	6 0 10	0 124 410.184 792 10 000 012.441 018 479 2	Step 2 Regulation	0 000 201.061 888 10000 000.020 106 188 8
4	Butt Area X Butt radius = Butt radius squared	cm cm	0 0 0	199 199 39 601	Tally Calculated	009 009 000 081
5	Butt radius squared X Pi = Butt area	 Constant cm^2	0 6 6	039 601 3.141 592 0 124 410.184 792	Step 4 Regulation	000 081 3.141 592 0 000 254.468 952
6	Butt area/ 10 000 = Butt area in m^2	cm^2 Constant m^2	6 0 10	0 124 410.184 792 10 000 012.441 018 479 2	Step 5 Regulation Calculated	0 000 254.468 952 10 000 000.025 446 895 2
7	Top area + Butt area = Sum	m^2 m^2 m^2	10 10 10	012.441 018 479 2 012.441 018 479 2 024.882 036 958 4	Step 3 Step 6 Regulation	000.020 106 188 8 000.025 446 895 2 000.045 553 084 0
8	Sum / 2 =Length in meters	 Constant m	10 0 *10	024.882 036 958 4 2 012.441 018 479 2	Step 7 Regulation Calculated	000.045 553 084 0 2 000.022 776 542 0
9	Length / 10 =Length in meters	dm Constant m	0 0 1	999 10 99.9	Tally Regulation Calculated	045 10 04.5
10	Average area* X length = Log volume	m^2 m m^3	10 1 11	012.441 018 479 2 99.9 01 242.857 746 072 06	Step 8 Regulation Calculated	000.022 776 542 0 04.5 00 000.102 494 439 00
11	Log volume Log volume rounded	m^3 m^3	11 **3	01 242.857 746 072 06 01 242.858	Step 10 *Scaling Manual*	00 000.102 494 439 00 00 000.102
12 (e.g.)	Log Volume + 0.0005 X 1000 Strip Decimal /1000	m^3 Constant Constant dm^3 m^3	11 11 8 0 3	1 242.857 746 072 06 1242.858 246 072 06 1 242 858.246 072 06 124 285 8 1242.858	Step 11 *Scaling Manual* *Scaling Manual* Function *Scaling Manual*	00 000.102 494 439 00 00 000.102 994 439 00 102.994 439 00 102 0.102

* Truncation allowed because top areas are always even numbers, thus Sum divided by 2 is never odd.

** See Rounding Rule from the *Scaling Manual*.

Rounding

1. If the remainder beyond the last digit to be reported is < 5, drop the last digit.

2. If the remainder beyond the last digit is > 5, increase the final digit by 1.

3. To prevent rounding bias, where the remainder is exactly 5 scalers will round the last digit to the closest even number. Thus, the number 3.55 rounded to one decimal place would be 3.6 (rounding up) and the number 6.450 rounded to one decimal place would be 6.4 (rounding down). However, current programming language may not provide this (even) function and will adopt the convention of rounding up on the exact half.

This page is intentionally left blank.

Glossary of Terms

The following definitions apply to this manual:

Accuracy	How close measurements or estimates are to their actual value or quantity.
Advanced decay	The late stage of decay in which the decomposition is readily recognized as the wood becomes punky, soft, stringy, pitted, or crumbly.
Adventitious	Developing in an unusual position, added from the outside, as adventitious branching.
Annual ring	The annual increment of wood (including early-wood and late-wood) which appears on a transverse section (or cross section) of a piece of wood and denoting one year's growth.
Bark	The tissues of a tree is outside cambium is composed of inner living bark and outer dead bark.
Bark Seams	Seams of bark extending into or embedded in the log.
Bias	A consistent or systematic distortion of sampling results or measurements arising from an incorrect method of sampling or measurement.
Bole	The trunk of a tree (seedlings and saplings have stems, not boles).
Bolt	Any short log specially cut to length, usually for the manufacture of a specific product.
Borer holes	Voids made by wood-boring insects or worms.
Branch whorl	A more or less circular arrangement of branches around a point on the bole of a tree.
Burl	A hard woody bump on a tree, more or less rounded in form, usually resulting from the entwined growth of a cluster of adventitious buds.

Butt end	The larger end of a log.
Butt log (or First Cut Log)	This refers to the first log cut from the bottom of the tree.
Butt rot	Any decay or rot developing in, and sometimes characteristically confined to, the butt log.
Butt swell	That part of a log outside its normal taper and extending from where the normal taper ends and the flare begins to the large end of the log. It is usually manifest only in butt logs due to the self buttressing growth of the tree near its base.
By the piece	By a count or tally of pieces.
Callipering	To take a diameter measurement at a point on a log other than at an end.
Catface	A defect on the surface of a tree or log resulting from a wound where healing has not re-established the normal cross section.
Check	A separation of the wood, perpendicular to the grain. See also End Check, Surface Check and Weather Check.
Clear	Free of knots and stain, and at least 2.5 m long in the case of lumber. Clear shingles must be free of knots, insect damage and meet the minimum shingle dimensions.
Coast	For the purpose of scaling, coast is defined as that area of the province where a log based stumpage appraisal is used (generally west of the Cascade Mountains).
Coefficient of variation	A measure of variability among units expressed as the ratio of the standard deviation (s) to the mean (x) and is usually expressed by the formula CV = s/x.
Collar	The portion of the log between the inside of the bark and a hole or rot in the heart of the log (the same as shell).
Compression wood	Is a type of defect that forms in conifers on the underside of leaning stems on the leeward side of trees exposed to strong winds, in crooked stems and in the lower part of trees growing on a slope.
Crook	An abrupt bend in the length of a log.

Dead side	A misshapen side of a log caused by the lack of growth of wood because of the death or removal of the inner bark, or phloem, along the side of the living tree.
Decay	The decomposition of wood substance cause by the action of wood-destroying fungi, resulting in softening, loss of strength and mass, and often change of texture and colour.
Defect	Any abnormality or irregularity which lowers the commercial value of wood. Typically defects will reduce a log's firmwood volume and/or log grade.
Diameter, small end	The average diameter, inside bark, at the upper end of the log.
Diametre breast height (DBH)	The stem diameter of a tree measured outside bark at breast height (1.30 m above ground level). DBH is used for standing trees, usually in the context of cruise data. The minimum butt diameter is usually used in the context of utilization standards.
Diametre deduction	A method of compensating for through-running firmwood defects by reducing the recorded radius or radii of a log or slab.
Diametre tape	A tape measure specially graduated so that the diameter may be read directly when the tape is placed round a tree bole, or piece of roundwood.
Dryland sorts	Flat areas, usually paved where loads of logs are lifted out of the water or off loaded from logging trucks and spread onto the ground for scaling, grading and subsequent sorting.
Earlywood	That part of the growth ring which is produced at the beginning of the growing season (usually it is less dense and lighter in colour than late wood). It is also called springwood.
End Checking	A type of weather check caused by rapid drying at the cut faces of a freshly cut log. They are usually multiple and normally penetrate only a short distance into a log.
Estimate (of a sample)	A value for a characteristic or parameter derived through using a sampling method.
Face (of a pile)	One of the surfaces of a pile of logs showing only the cut ends of the logs.

Figure	Any design or distinctive markings on the long surfaces of wood.
Fire scar	A healing or healed-over injury, caused or aggravated by fire, on a woody plant.
Firm redheart	A form of incipient decay characterized by a reddish colour produced in the heartwood that does not render the wood unfit for the majority of uses. Firm redheart contains none of the white pockets that characterize the more advanced stage of decay (not to be confused with natural red heartwood).
Firmwood deductions	Deductions made from the gross volume of a log to account for rot, hole, char and missing wood.
Flare	A rapid increase in the taper of a log at the butt end of the log due to swell.
Foreign material	Any material extraneous to roundwood such as earth, ice, snow, and branches, any of which add mass to the load.
Fork	A division of a log or a stem of a tree into two or more branches.
Fuelwood	Roundwood, whole or split, produced for heating purposes.
Grade reduction	In log grading, the process of determining the portion of the log not suitable for the manufacture of various products.
Grain	the general direction of the longitudinal wood elements in the tree.
Grain density	Used in some log grading, refers to the spacing between the annual rings and measured as a ring count over a set distance.
Gross scale	The volume of a log inside bark and includes unsound wood and holes in the log.
Gross volume	Total inside bark volume and includes any defects.
Gross weight	The weight of a load, including the truck weight, before unloading
Heart rot	Any rot characteristically confined to the heartwood. It generally originates in the living tree.
Heart shake	A shake that originates at the pith of a log and extends across the annual rings (also called heart check and reft crack).

Heartwood	The inner core of a woody stem wholly composed of non-living cells and usually differentiated from the outer enveloping layer (sapwood) by its darker colour. It is usually more decay resistant than sapwood.
Hogged Tree Material	Tree residue or by-products that have been shredded into fragments by mechanical action.
Hole	Any opening in a log, other than check, shake or split. It may extend partially or entirely through a log and be from any cause.
Incipient decay	The early stage of decay in which the decomposition has not proceeded far enough to soften or otherwise change the hardness of the wood noticeably. It is usually accompanied by a slight discolouration of the wood (see also Firm Redheart).
Insect holes	Voids made by insects or insect larvae.
Interior	For the purpose of scaling, interior is defined as the area where a lumber and chip based stumpage appraisal system is used (generally east of the Cascade Mountains).
Intermediate decay	A more advanced stage of decay than incipient decay characterized by a change in the colour of the wood and some slight decomposition and loss of strength. (see also White Speck).
Knot indication	On the coast, a characteristic feature showing in the bark of a log which indicates a branch once grew there, but has since been shed and the residual knot covered with new growth wood. Sometimes knot indications will also show on the sapwood surface when the bark has been removed.
Knot Spacing	In the interior, a measurement of $\geq$ 3 cm knots both along the length and side-to-side for grade 1 logs only.
Latewood	The denser, smaller-celled, usually darker, later formed part of an annual ring, also called summerwood.
Length deduction	A method of compensation for firmwood defects by reducing the recorded length of a log or slab.
List of permissible defects	Are those common to the species and a defect may not appear if it is not a common defect or does not affect that species.
Log	Any section of the bole, or of the thicker branches, of a felled tree, after trimming and cross cutting.

Log rule	A table showing the estimated or calculated volume of wood that is contained in logs of given length, form, and end diameter inside bark.
Lumber	Lumber must be 2.5 m long, free of rot and fractures. Lumber is a manufactured product derived from a log in a sawmill, or in a sawmill and planning mill, which when rough shall have been sawed, edged and trimmed at least to the extent of showing saw marks or other marks made in the conversion of logs to lumber on the four longitudinal surfaces of each piece for its overall length, and which has not been further manufactured other than by cross-cutting, ripping, re-sawing, joining crosswise and/or endwise in a flat plane surfacing with or without end matching and working. (source NLGA)
Mass	The same as the weight.
Mean	The average of a set of measurements derived by summing all values and dividing by the total number of measurements.
Merchantable lumber	Good, strong, general purpose lumber graded as better than utility or number 3, and not less than 2.5 m long (this is assessed on the basis of knots and twist).
Minimum collar thickness	Same as minimum shell thickness. The collar of firmwood surrounding heart defects considered in grading to be the minimum thickness for the manufacture of lumber.
Missing wood	Wood that is absent from a log or part of a log that otherwise would usually be regarded as naturally complete. It may be caused by advanced decay, fire, or the operation of a machine.
Moisture content	The mass of water in wood expressed as a percentage of its total weight.
Mould or mildew	A superficial fungal growth usually appearing in the form of a woolly or furry coating of varying colour.
Net firmwood volume	The volume remaining after all allowable firmwood deductions for defects from gross volume have been made; in stacked measure, deductions include voids.
Normal taper	The regular decrease in diameter of a log from its large to small end, exclusive of butt swell.

Otherwise grade	On the coast, a log which meets all the requirements of the higher grade, including being free of non-permissible defects, but has more grade reduction than allowed for the higher grade.
Out of round	Used to describe a shape and means that it departs from what is usually regarded as approximately circular.
Parcel	Any quantity of grouped logs.
Peeled	All or most of the bark has been removed.
Peeler block	Peeler block is a segment of a log's length, usually 2.6 m, suitable for the manufacture of veneer on a rotary lathe.
Piece product	A product scaled by the number of separate pieces of one kind.
Piece scale	The scaling method whereby each piece is scaled by recording the timber mark, species and by taking its length, top and butt diametres, deducting for defects, and assigning a grade.
Pipe	A hole, the product of decay, running through the centre of a log.
Pistol grip	A pronounced bend at the butt end of a log resembling the handle of a pistol.
Pitch ring (or silt shake)	An accumulation of pitch or resin fully or partially around the circumference of an annual ring, where there is no visible wood separation. Where a pitch ring appears at only one end of a log, no loss for lumber or plywood is considered. Where a pitch ring appears at both ends of a log it is treated as a tight ring shake, and the log is graded accordingly.
Pith	The small cylinder of primary tissue of a tree stem around which the annual rings form.
Pocket rot	In wood, any rot localized in small areas, generally forming rounded or lens shaped cavities. See also Decay
Population	The aggregate of all units from which samples are selected to make estimates about the aggregate.
Precision	The closeness, to each other of repeated measures of the same quantity. When precision is achieved, values will be clustered around their mean.

Probability statement	A statement that gives a range of a characteristic within which the true value lies, with a stated probability that the statement is correct (e.g., there is a 95% probability that value X will be within 2 sampling errors of the actual value).
Punky	A soft, weak, often spongy wood condition caused by decay. See also Decay
Quality considerations	In log grading, the factors which reduce the log's quality in terms of its potential product recovery and is usually confined to the size and placement of knots and the degree and placement of any twist observed on the log.
Radius and diameter	Log radius in the grade rules is expressed as centimetres of radius, which is equal to and interchangeable with, rads of diameter. An exception should be noted in the grade rule for firmwood reject where the measurement is expressed in centimetres of diameter.
Return Number	Also called a raft or return number. It is a unique number (in conjunction with the scaler's licence number and date), and is assigned to a parcel of timber by a scaler. The scaler assigns #0001 to their first parcel scaled and continues consecutively through to 9999. If the scaler scales more than 9999 parcels of timber they then restart with 001. The dates will then determine the uniqueness of the number.
Ring rot	Any rot localized mainly in the early wood of the annual rings, giving a concentric pattern of decayed wood in cross section.
Ring shake	A separation of the wood following the circumference, or part of the circumference, of an annular ring.
Rot	See Decay.
Round (adjective)	Approximately correct; of an approximate circular cross section.
Round (transitive verb)	To express as a round number.

Rounding	The process of approximating to a number by omitting certain of the end digits, replacing by zeros if necessary, and adjusting the last digit retained so that the resulting approximation is as near as possible to the original number. It the last digit is increased by unity, the number is said to be rounded up; if decreased by unity, it is rounded down. When both are under consideration, the process is said to be one of rounding off.
Round wood	Any section of the stem, or of the thicker branches, of a tree of commercial value that has been felled or cut but has not been processed beyond removing the limbs or bark, or both, or splitting the section (for fuel wood).
Sample	A unit or part selected from a population that is representative of that population.
Sample scaling	The method of scaling where only a portion of the total production is piece scaled. Weight scaling is the most prominent example of sample scaling. Sample scaling is also used to scale some special forest products.
Sample size	The number of samples to be taken to sample the population to meet the sampling objectives.
Sampling error	A statistic which defines how reliable (or precise) sampling results are (the same as the standard error of the estimate, or the standard error of the mean and the standard error).
Sap rot	Any rot characteristically confined to the sapwood.
Sapwood	The living wood of pale colour near the outside of the log. Under most condition the sapwood is more susceptible to decay than heartwood.
Scale (noun)	The measured or estimated quantity, expressed as the volume, or area, or length, or mass, or number of products obtained from trees and measured or estimated after they are felled.
Scale (verb)	To measure or estimate the quantity, expressed as the volume, or area, or length, or mass, or number of products obtained from trees after they are felled.

Scale stick	A graduated stick for measuring the end diameters of logs or felled trees inside bark. Of many types, it usually has a shaped handle on one of its ends, a tine at the other, and a log rule reproduced on its length; it also means a graduated stick for measuring the external dimensions of stacked wood.
Scaler	A person who is licensed or appointed to scale timber under the *Forest Act*.
Scales	An instrument or machine for determining weight.
Schedule of Coast Timber Grades	The set of coast grade rules appended to the *Scaling Regulation*.
Schedule of Interior Timber Grades	The set of interior grade rules appended to the *Scaling Regulation*.
Second cut log	This refers to logs cut after the butt log.
Shake	One or more separations along the grain of a log or tree, normally radiating outward from the pith (i.e., heart shake, [also called heart check]); caused by stresses during growth. Where several such separations radiate outward, they are referred to as "star shake" (see "Ring Shake").
Shells	See Collars.
Shingles	Must be at least 23 rads long, 4 rads wide, have no knots larger than 7 cm or 3.5 rads and have no knots on any of the four edges.
Shop grade (coast)	Refers to clear lumber at least 2.5 m long, which is cut out from between large knots.
Side	Regardless of whether on land or in the water, the surface of a log has two visible sides, one on each side of a vertical plane that passes through the centre of each end of the log.
SI units	Only the base, supplementary, and derived units of measure included within the International System of Units (SI) (see CSA Standard CAN3-Z234.2).
Significant digit	Any digit that is necessary to define the specific quantity or value.
Slab	A piece of timber that has fractured along a plane roughly parallel to the longitudinal axis of the original log.

Softwood	Generally, one of the botanical groups of trees that in most cases have needle- or scale-like leaves; the conifers; also the wood produced by such trees. The term has no reference to the actual hardness of the wood.
Solid Wood Equivalent	The firmwood volume of logs required to produce a given quantity of a specified product.
Sound wood	Wood free from defect.
Special Forest Products and Special Forest Products Regulations	As defined under the *Forest Act*. To be classified as a Special Forest Product, the product: -must be manufactured on the harvest site; -the product must conform to the product description; and -the product must be contemplated (named) in the harvesting authority (for Crown timber).
Spiral check	Wood separations starting on a log's surface and travelling toward the pith. If the natural grain of the log twists, the checks will follow and spiral around the log's axis.
Spiral grain	See Twist.
Split	Cleft completely and lengthwise along the grain of a log; usually results from falling, bucking or handling damage.
Stack	For scaling purposes, an orderly arrangement of bolts less than or equal to the 2.6 m class in length.
Stacked cubic metre (symbol m^3 [stacked])	The total amount of wood, bark, and airspace contained in a stack of round wood, as determined by its external dimensions, equal to 1 m^3.
Stacked cubic metre peeled (symbol m^3 [stacked] peeled)	The total amount of wood and airspace contained in a stack of peeled round wood, as determined by its external dimensions, equal to 1 m^3.
Stacked scaling	The act or process of measuring or estimating the total amount of wood, bark, and airspace contained in a stack of round wood, where the bolt length is less than or equal to the 2.6 m class as determined by its external dimensions.
Stratum	A subdivision of the entire population.

Surface checks	Checks or fractures on the outside surface of the log that extend through the bark into the adjacent sapwood. Severe checking will extend into the heartwood.
Sweep	A gradual curve in the length of a log, as distinct from an abrupt bend or curvature.
Tally	A form completed by a scaler used to capture timber details such as timber marks, species, grade, volume, products, and dimensions. It also identifies the time and place of scale, as well as for whom timber is scaled. It is used as a basis for stumpage collection.
Tally number	See Return number.
Taper	The progressive decrease or increase in the diameter of a log from one end or point on its length to another.
Tare	The weight of the unloaded vehicle or container.
Tolerance	The total range of variation permitted for a required size.
Tree length	The trimmed bole of a tree that has been felled and had the top removed.
Trim allowance	The sound wood surrounding rot and other defects made in grade deductions to account for loss in lumber recovery because a sawyer must square defects out.
Trunk	See Bole.
Twist	A quality consideration in log grading where the logs grain is aligned in a spiral-shaped orientation around the axis of the log. It is the same as spiral grain and its measurement is often referred to as the slope of grain.
Unit of measurement for lumber	Board foot is the unit of measurement of lumber. A board foot is the quantity of lumber contained in or derived by drying, dressing or working from a piece of rough lumber 1 inch thick, 1 foot wide, and 1 foot long, or its equivalent in thicker, wider, narrower or longer lumber. (source NLGA)
Upper	Closest to the small end, or top end, of a log.
Variable	A characteristic of a population that may vary from one unit to another.

Variance (of a population)	A measure of the dispersion of individual unit values about their mean.
Void	An unnecessary airspace in a stack of round wood large enough to accommodate the average size of log or bolt in the stack.
Weather check	A type of check caused by rapid drying of the outer surface of a freshly cut log. They are usually multiple where exposed to the drying effect of the wind and sun, and may eventually develop into one or more deep checks (see also End Check).
White Speck	The intermediate stage of Fomes pini decay, characterized by small white pits or streaks in the wood.
Woodchip	A woodchip is a small thin portion of wood cut from a larger piece by a mechanically operated knife.
Worm holes	See Borer holes. Voids made by insects or insect larvae.

This page is intentionally left blank.